DRAUGHTSMAN CIVIL

PRACTICAL I & II

VOCATIONAL EDUCATION

Higher Secondary - First Year

A Publication under
Government of Tamilnadu
Distribution of Free Textbook Programme
(NOT FOR SALE)

Untouchability is a sin
Untouchability is a crime
Untouchability is inhuman

TAMILNADU
TEXTBOOK CORPORATION
College Road, Chennai - 600 006.

© Government of Tamilnadu
First Edition - 2010

CHAIRPERSON

Mrs. M. SATHIAVENI
Chairperson
Head of the Department (Civil)
Central Polytechnic College,
Tharamani, Chennai - 600 113.

AUTHORS

Mr. K. Senthilvelan
Vocational Teacher
General Cariappa Hr. Sec. School
Saligramam, Chennai - 600 093.

Mrs. S. Deepa Patchiammai
Vocational Teacher
NLC Girls Hr. Sec.School
Block 11, Neyveli - 607 803.

Mr. R. Ravi
Vocational Teacher
Sengunthar Magasana Hr. Sec. School
Tharamangalam,
Salem Dist. - 636 502

Mr. A.Tamilselvan
Vocational Teacher,
RN. Govt. Boys Hr. Sec. School
Aykkaran Pulam 2
Nagai Dist. - 614 707.

Mr. V.V. Balaji, B.E.,
Vocational Teacher
Govt. Hr.Sec.School,
Mettur Dam
Salem Dist. - 636 401

This book has been prepared by The Directorate of School Education on behalf of the Government of Tamilnadu

This book has been printed on 60 GSM Paper

Printed by Offset at:

Syllabus

PRACTICAL I (DRAWING)

DRAWINGS THROUGH MANUAL AND AUTOCAD

BASIC ENGINEERING DRAWING

01. i. Lettering and Numbering Practice

    ii. Dimensioning Practice

02. Line techniques and circles

03. Geometrical construction

    Bisecting a line – Perpendicular - Division of line – Angles – Square

04. Conic Sections - Ellipse, Parabola and Hyperbola

05. Conventional symbols of materials

06. Symbols for Doors and Windows

07. Symbols for Sanitary fittings

08. Symbols for Electrical Fittings

09. Isometric view & Orthographic projections - Model – I

10. Isometric view & Orthographic projections - Model – II

CIVIL ENGINEERING DRAWING

11. Bond in Brick work – Right Angled (English Bond (or) Flemish Bond)

12. Section of Foundation (Types of footings of wall and foundation details for steps and wall)

13. Arches (Flat, Semi circular, Elliptical and Segmental Arch)

14. Panel door

SYLLABUS

PRACTICAL II (LAB)

01. Determine the Normal consistency of the given cement sample
02. Determine the Initial Setting time of the given cement sample.
03. Determine the Fineness value of the given cement sample
04. Determine the VOIDS RATIO of the given sand sample.
05. Determine the POROSITY of the given sand sample.
06. Determine the BULK DENSITY of the given sand sample.
07. Water absorption test on coarse aggregate.
08. Water absorption test on Brick.
09. Setting out work for a single room building for foundation.
10. Construct a Brick masonry in English bond for a one brick wall.
11. Construct a Brick masonry in Flemish Bond for a one brick wall.
12. White and colour washing for a plastered surface
13. Study of steel fabrication for a Lintel.
14. Study of steel fabrication for a one way slab.

PREFACE

The task of Engineering studies is sky High. For which Civil Engineering students should have the relevant books for their need. Civil Engineering is a Universal Subject function without this faction.

Imparting Technical Education in school level have been started in 1978. Draughtsman Civil and Building Maintanance are combined in this book.

Basic Engineering Drawing, Building Materials and Practice and AUTO CAD are interlinked in one day to day life.

Understanding the concept of Civil Department syllabus, this book has been prepared in detail in each chapter with due importance are given to clear diagrams and questions.

Now the situation has changed by imparting Technical Education only through Engineering Colleges. At present, students who have studied in Vocational groups are deserved to admission at Polytechnic and Job opportunity are bright.

I must sincerely convey my thanks esteemed to the school Education Director and Joint Director whose partonage on this book to comeout and the committee of learned Teachers who sholdered the responsibility to bring the book in good shape.

The student community will appreciate and take lead of the task to modern world.

M. SATHIAVENI

Chairperson

CONTENT

PRACTICAL I (DRAWING)

S.No.	Name of the Exercise	Page No.
DRAWINGS THROUGH MANUAL AND AUTOCAD		
Basic Engineering Drawing		
01.	i. Lettering and Numbering Practice	2
	ii. Dimensioning Practice	6
02.	Line techniques and circles	8
03.	Geometrical construction	11
	Bisecting a line – Perpendicular - Division of line – Angles – Square	
04.	Conic Sections - Ellipse, Parabola and Hyperbola	15
05.	Conventional symbols of materials	19
06.	Symbols for Doors and Windows	20
07.	Symbols for Sanitary fittings	21
08.	Symbols for Electrical Fittings	22
09.	Isometric view & Orthographic projections - Model – I	23
10.	Isometric view & Orthographic projections - Model – II	24
Civil Engineering Drawing		
11.	Bond in Brick work – Right Angled (English Bond (or) Flemish Bond)	25
12.	Section of Foundation (Types of footings of wall and foundation details for steps and wall)	29
13.	Arches (Flat, Semi circular, Elliptical and Segmental Arch)	32
14.	Panel door	35

CONTENT

PRACTICAL II - LAB

S.No.	Name of the Exercise	Page No.
01.	Determine the Normal consistency of the given cement sample	41
02.	Determine the Initial Setting time of the given cement sample	43
03.	Determine the Fineness value of the given cement sample	45
04.	Determine the VOID RATIO of the given sand sample.	46
05.	Determine the POROSITY of the given sand sample.	48
06.	Determine the BULK DENSITY of the given sand sample.	50
07.	Water absorption test on coarse aggregate.	52
08.	Water absorption test on Brick.	53
09.	Setting out work for a single room building for foundation.	54
10.	Construct a Brick masonry in English bond for a one brick wall.	56
11.	Construct a Brick masonry in Flemish Bond for a one brick wall.	58
12.	White and colour washing for a plastered surface	60
13.	Study of steel fabrication for a Lintel.	61
14.	Study of steel fabrication for a one way slab.	63

PRACTICAL I
(DRAWING)

01. I. LETTERING AND NUMBERING PRACTICE

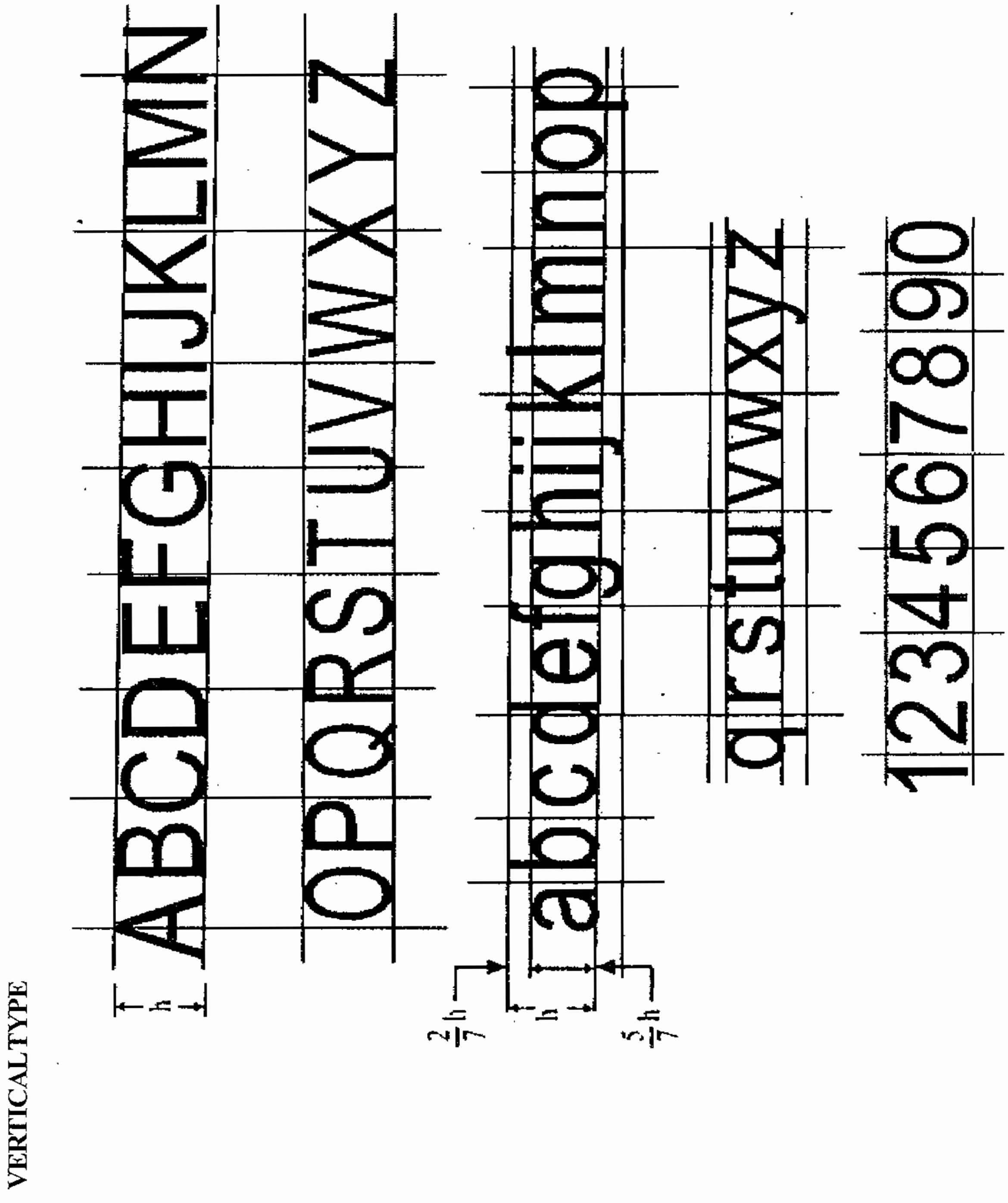

INCLINED TYPE

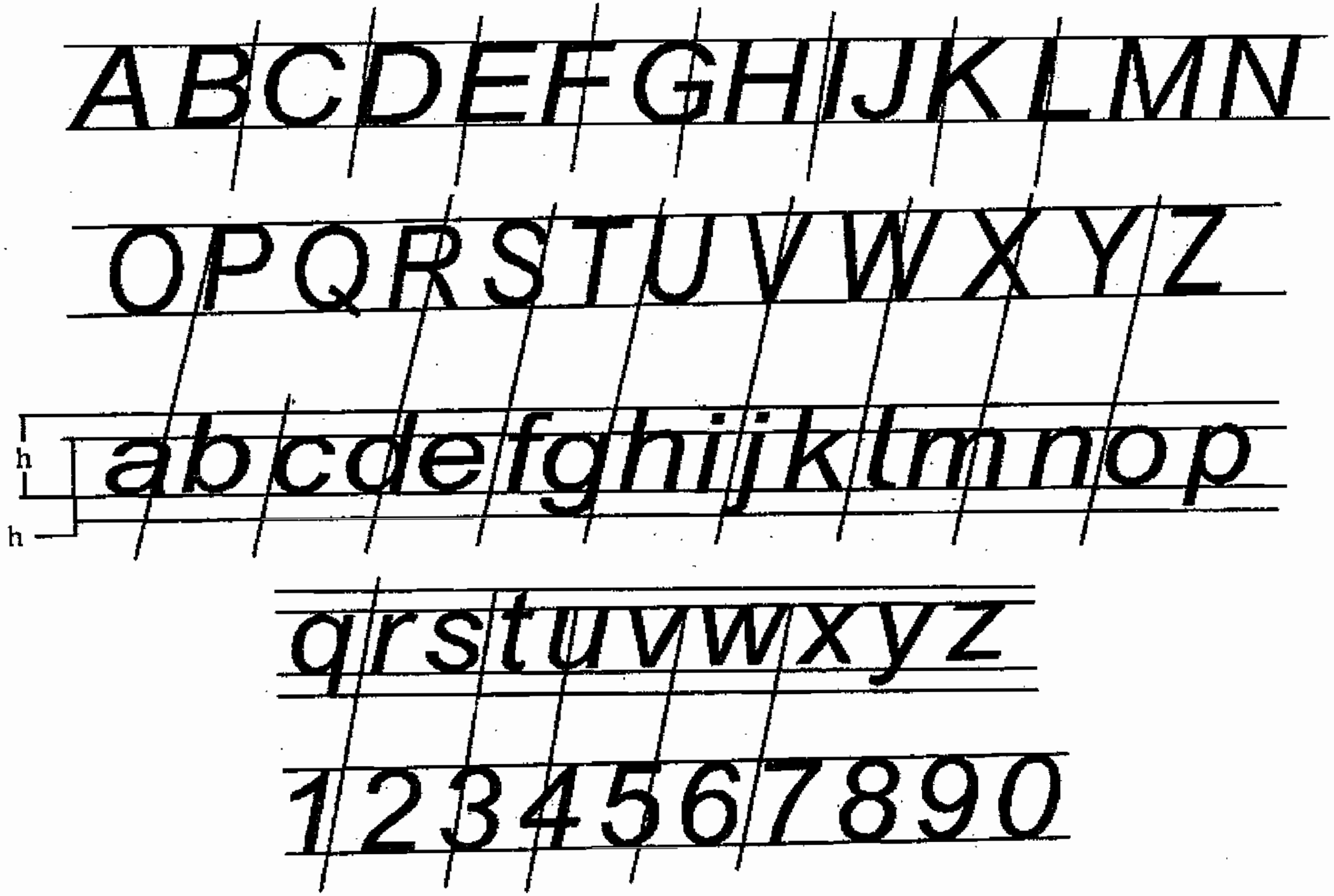

DOUBLE STROKE LETTERING

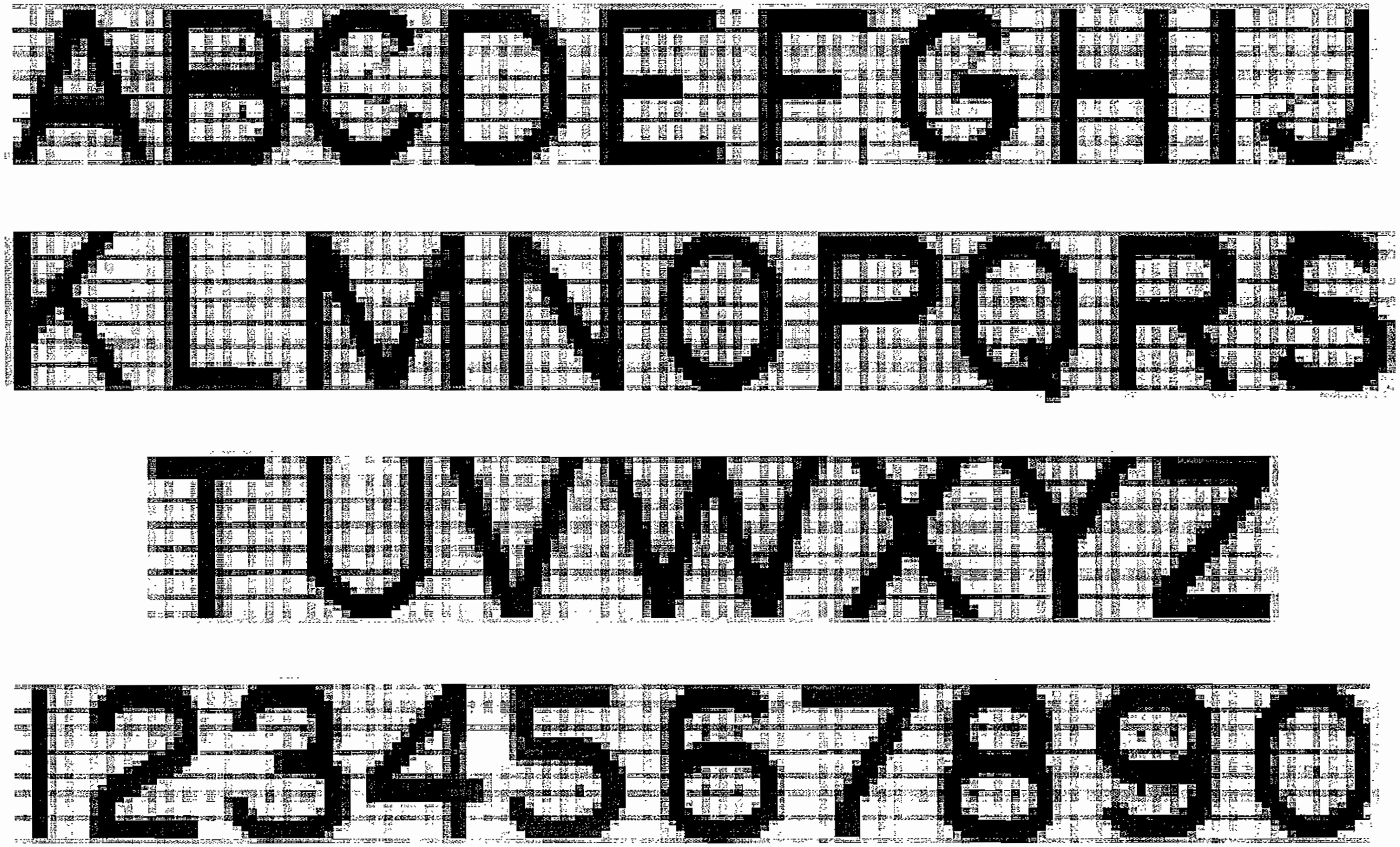

IMPORTANT POINTS FOR BASIC DRAWINGS

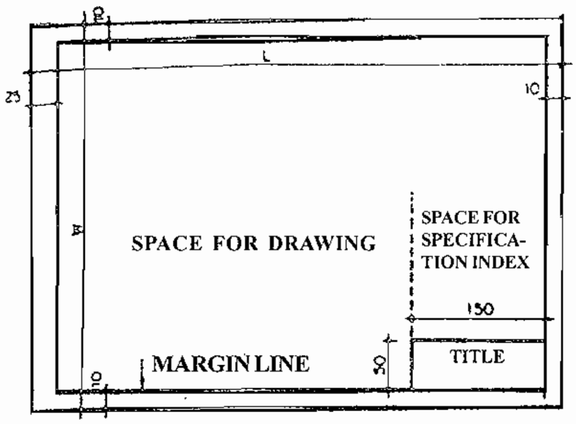

SIZE	W (mm)	L (mm)	A (m²)
A0	841	1189	1.00
A1	594	841	0.50
A2	420	594	0.25
A3	297	420	0.125
A4	210	297	0.063

SIZE AND LAYOUT OF DRAWING SHEET

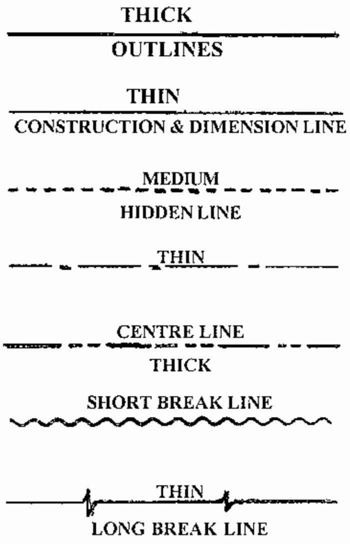

DIFFERENT TYPES OF LINES USED IN CONSTRUCTION DRAWINGS

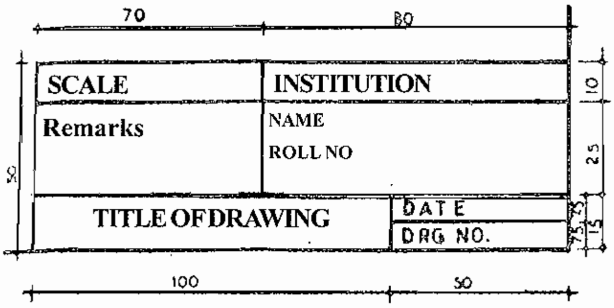

DETAILS OF TITLE BLOCK

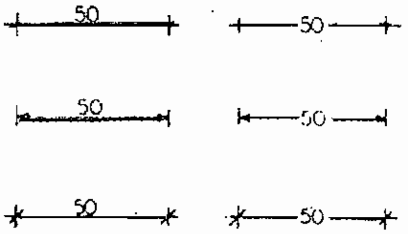

METHODS OF DIMENSIONING

ALL DIMENSIONS ARE IN MILLIMETRES

II. DIMENSIONING PRACTICE

ALIGNED SYSTEM

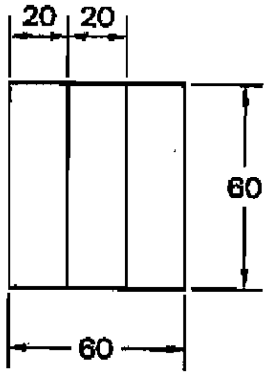

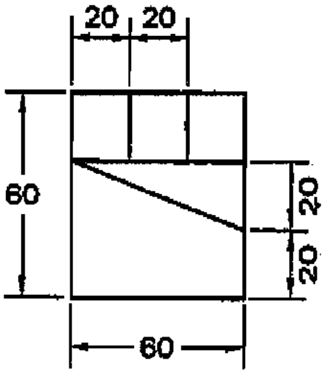

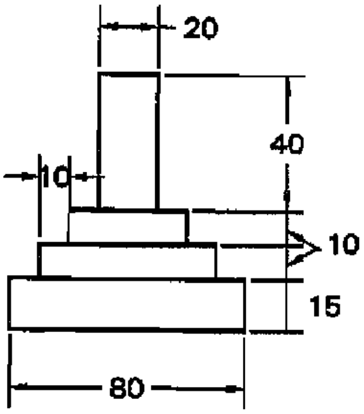

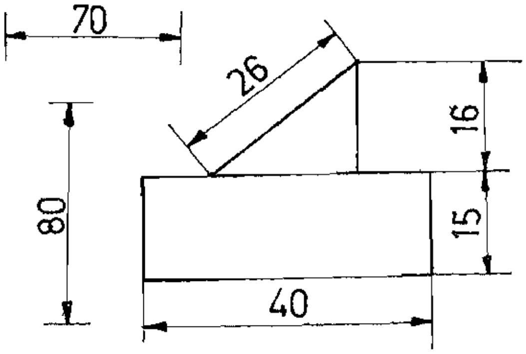

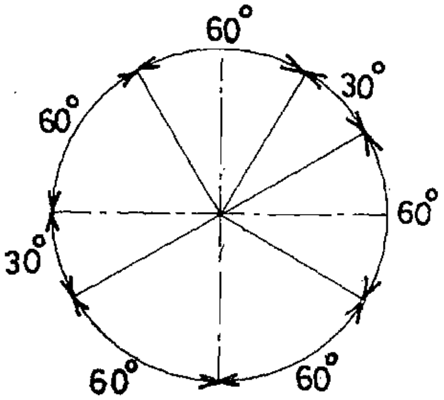

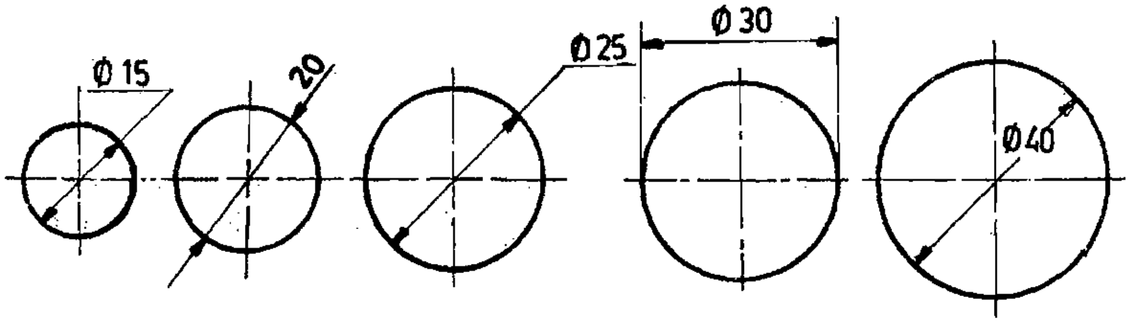

ALL DIMENSIONS ARE IN MILLIMETRES

DIMENSIONING PRACTICE

UNI-DIRECTIONAL SYSTEM

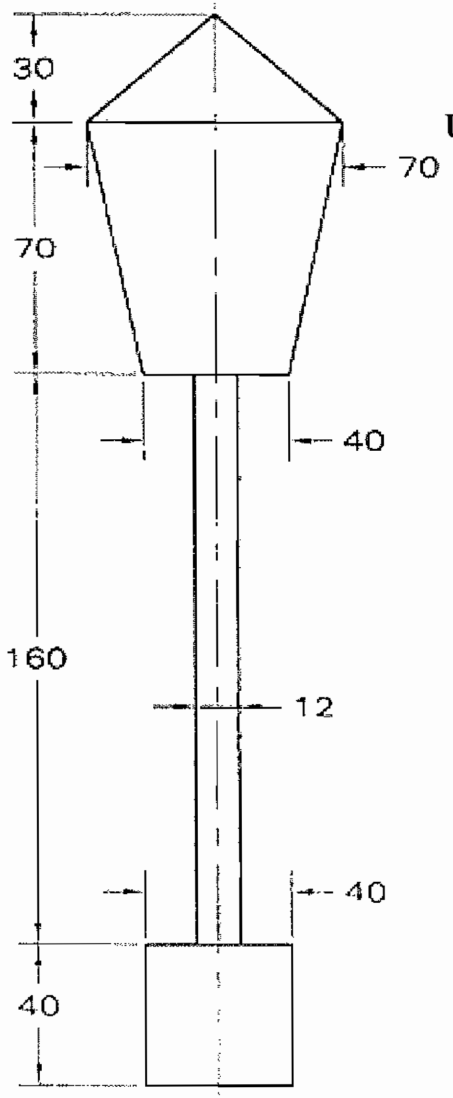

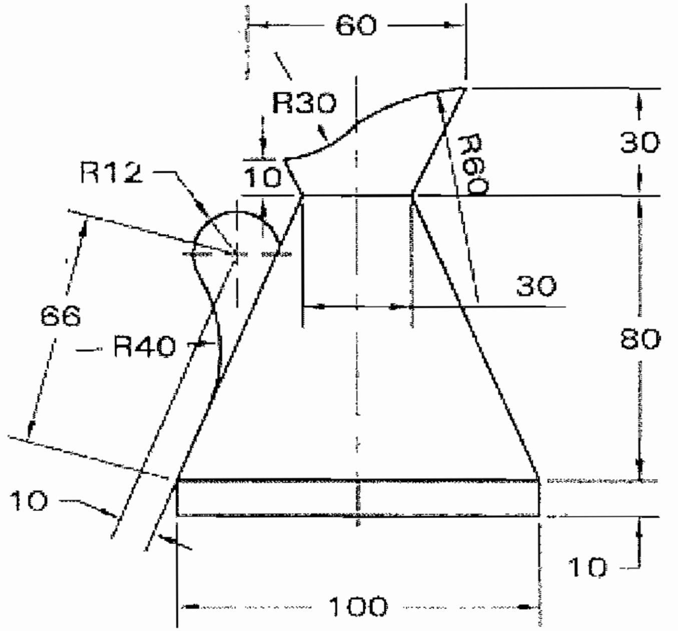

ALL DIMENSIONS ARE IN MILLIMETRES

2. LINE TECHNIQUES & CIRCLES

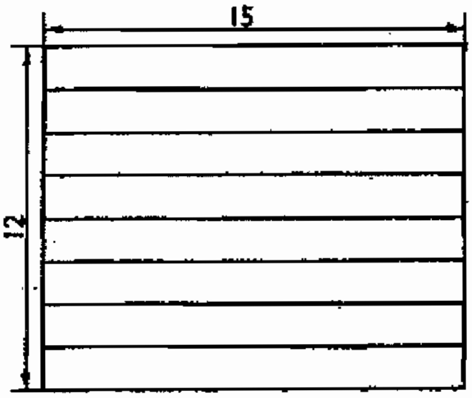

HORIZONTAL LINES

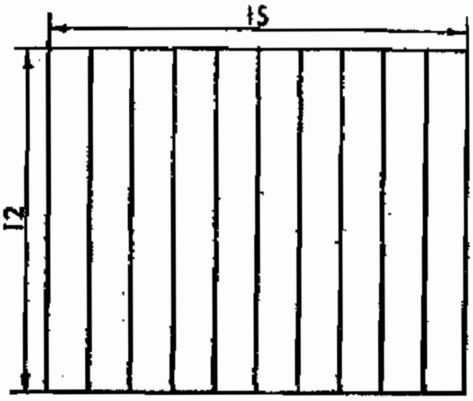

VERTICAL LINES

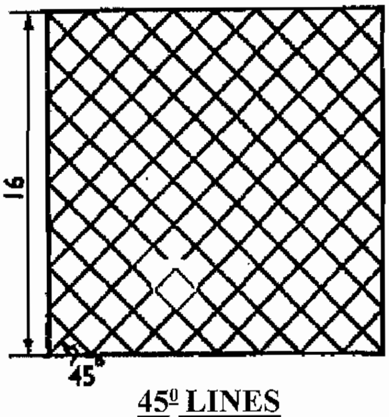

45° LINES

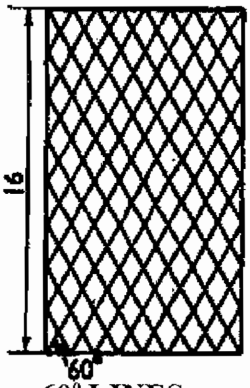

60° LINES

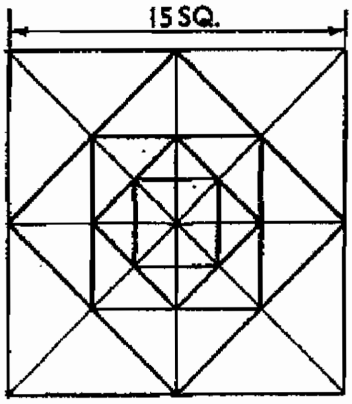

SQUARE IN SQUARES

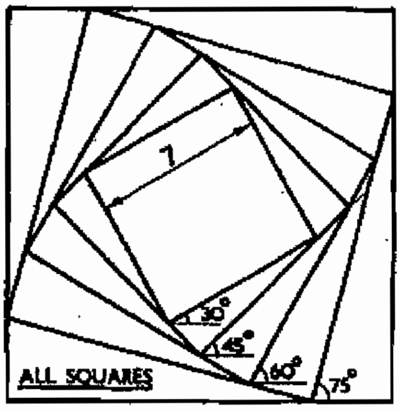

ALL SQUARES

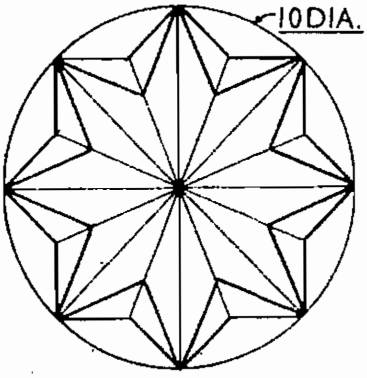

CIRCLE AND DESIGN

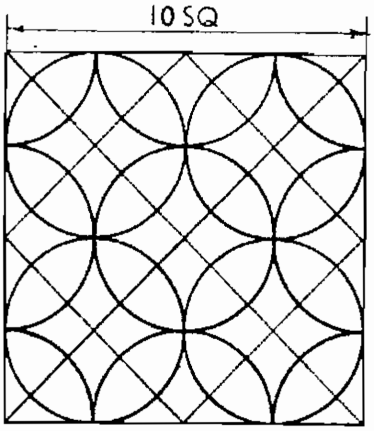

SQUARE IN CIRCLES

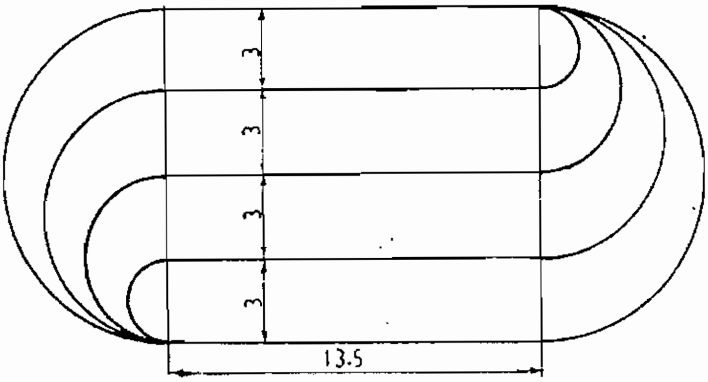

RECTANGLE CIRCLES

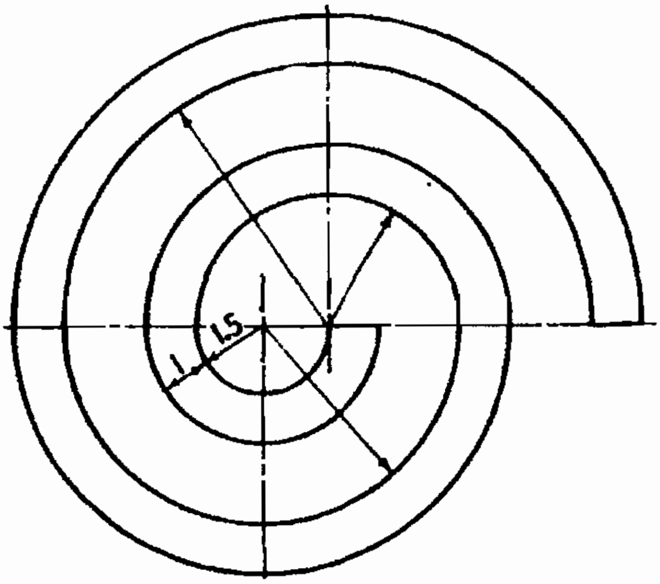

CONTINOUS ARC

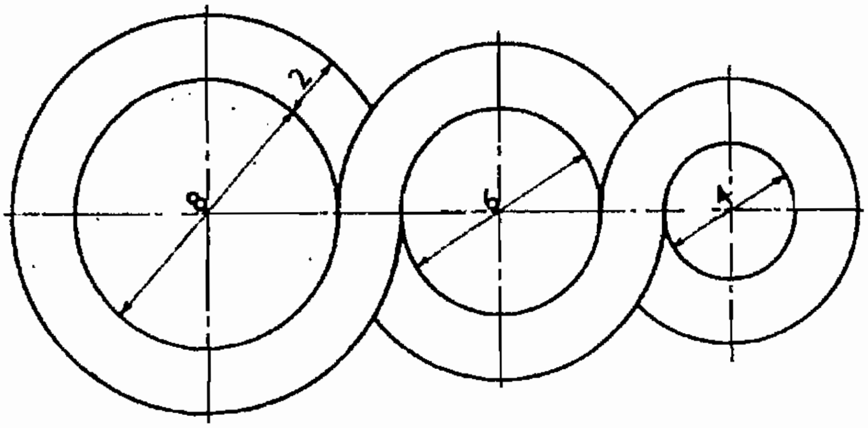

COMBINED CIRCLES

03. GEOMETRICAL CONSTRUCTION

BISECTING A LINE – PERPENDICULAR - DIVISION OF LINE – ANGLES – SQUARE

GEOMETRICAL CONSTRUCTION

BISECTINGALINE

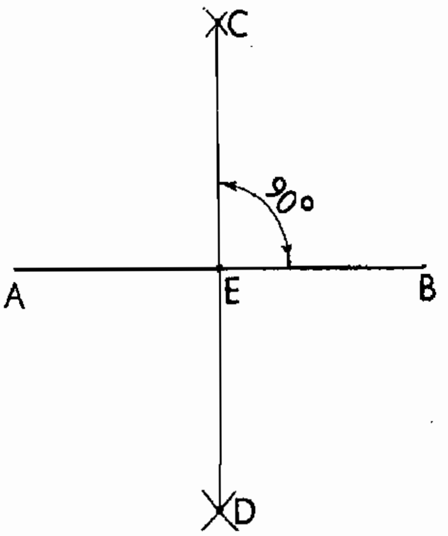

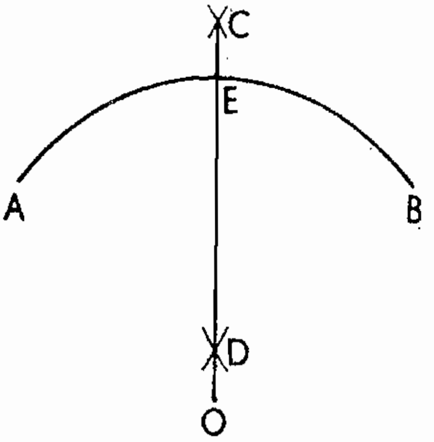

PERPENDICULAR

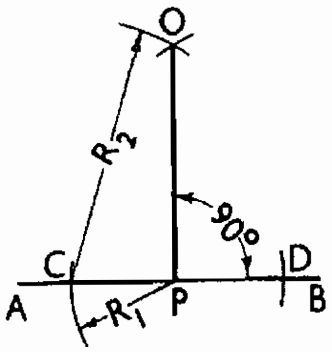

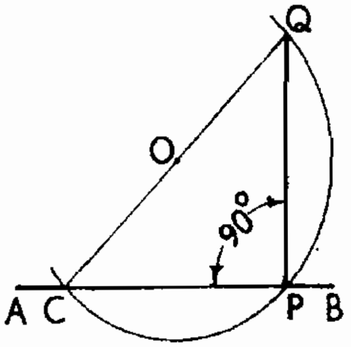

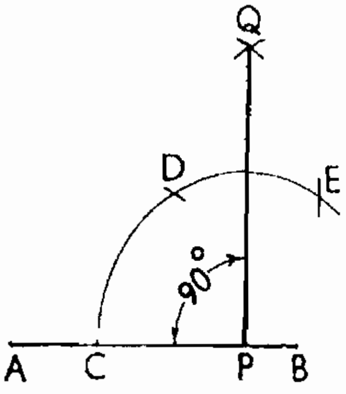

DIVISION OF LINE

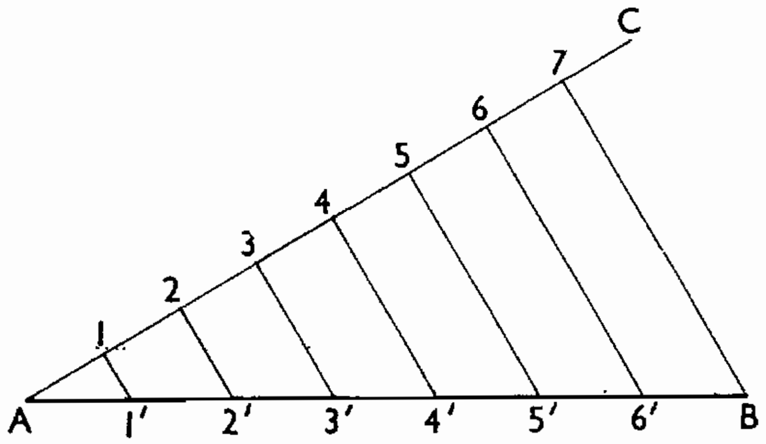

ANGLES

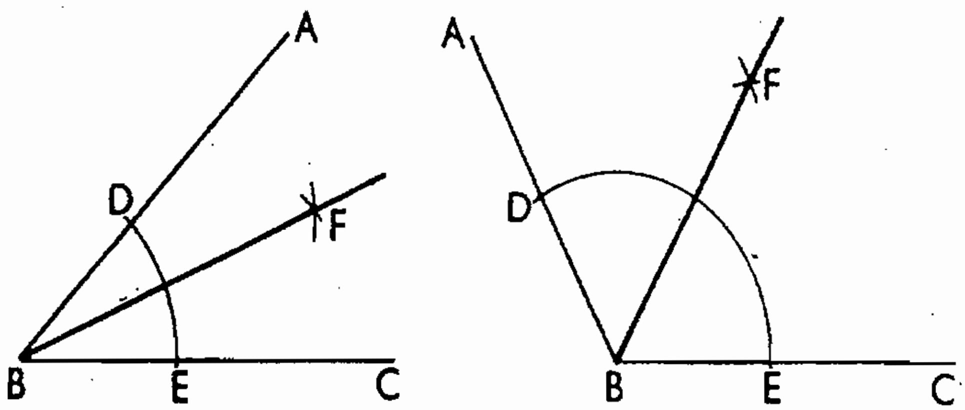

ANGLES

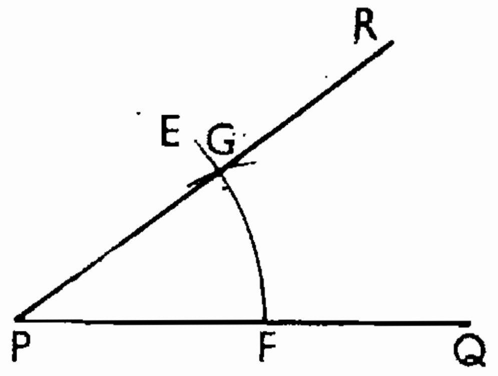

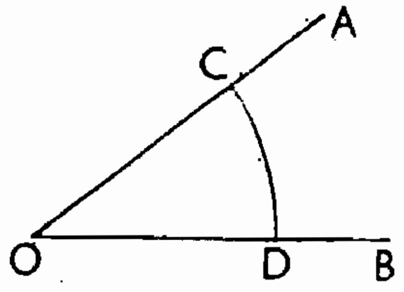

ANGLES

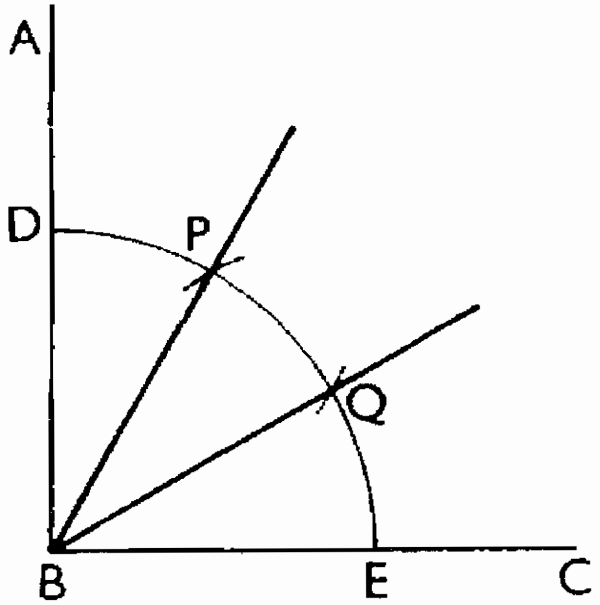

TRI ANGLES

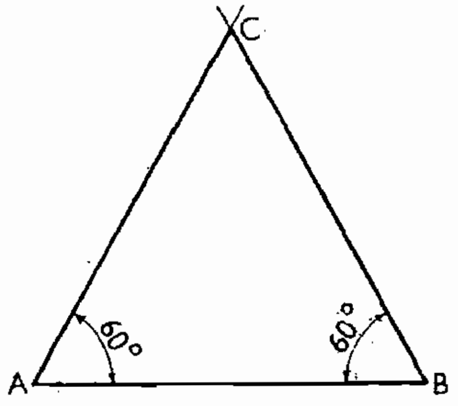

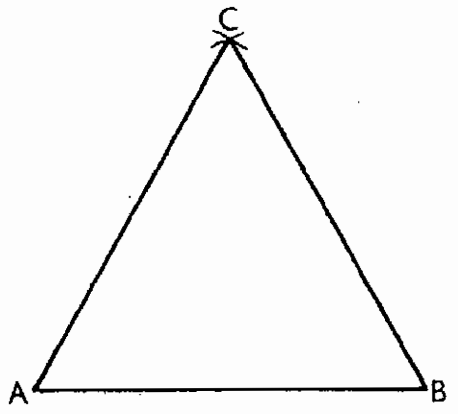

SQUARES

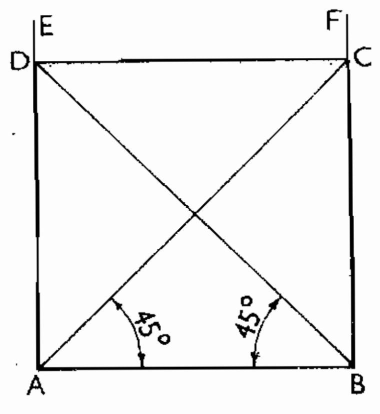

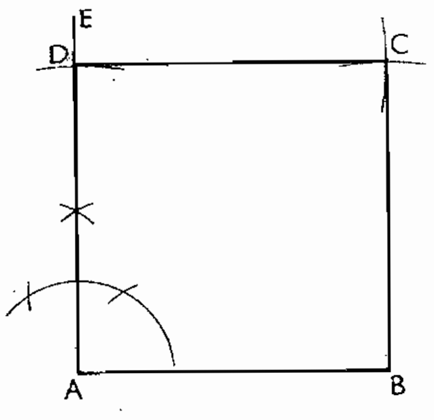

04. CONIC SECTIONS - ELLIPSE, PARABOLA AND HYPERBOLA

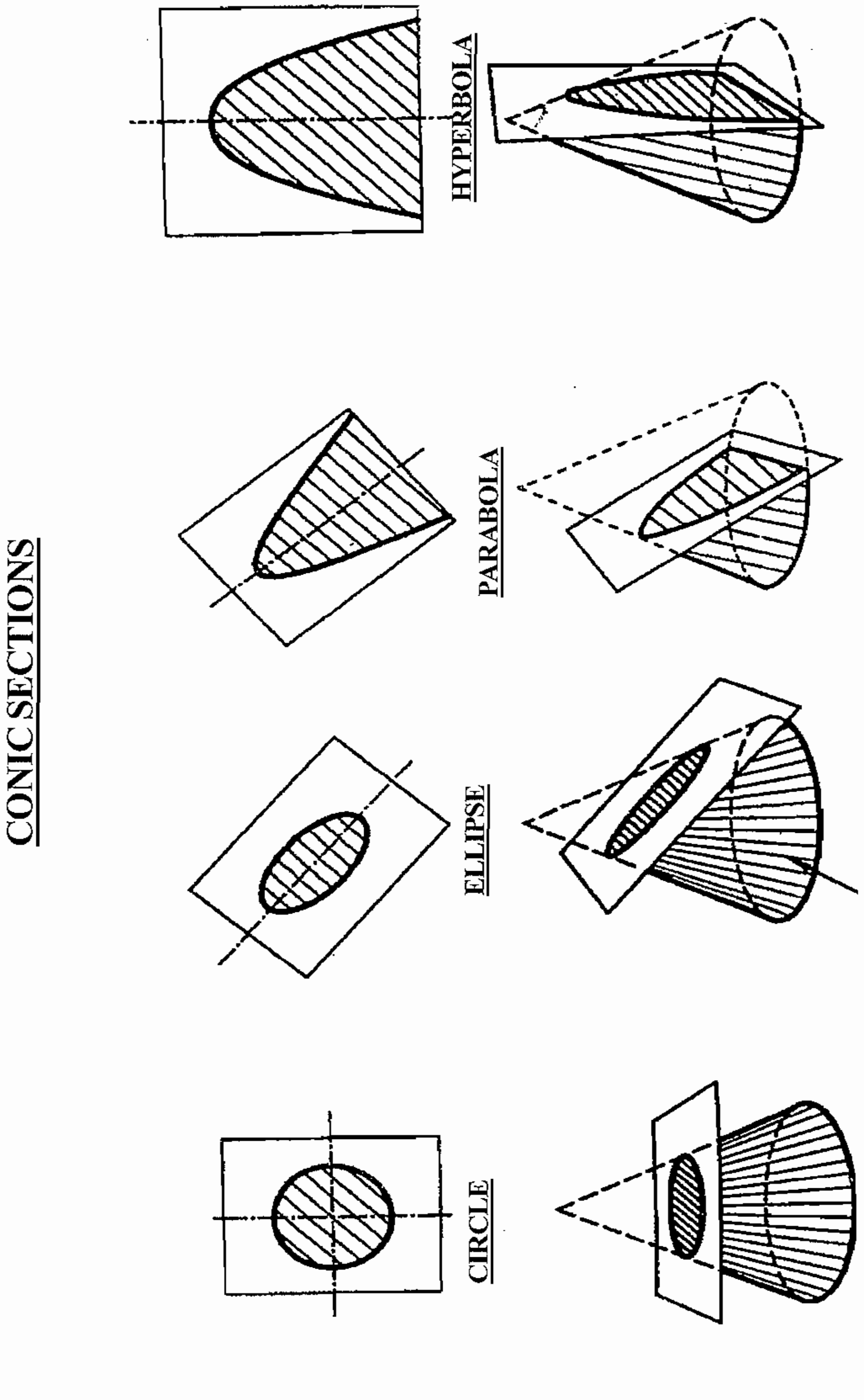

ELLIPSE

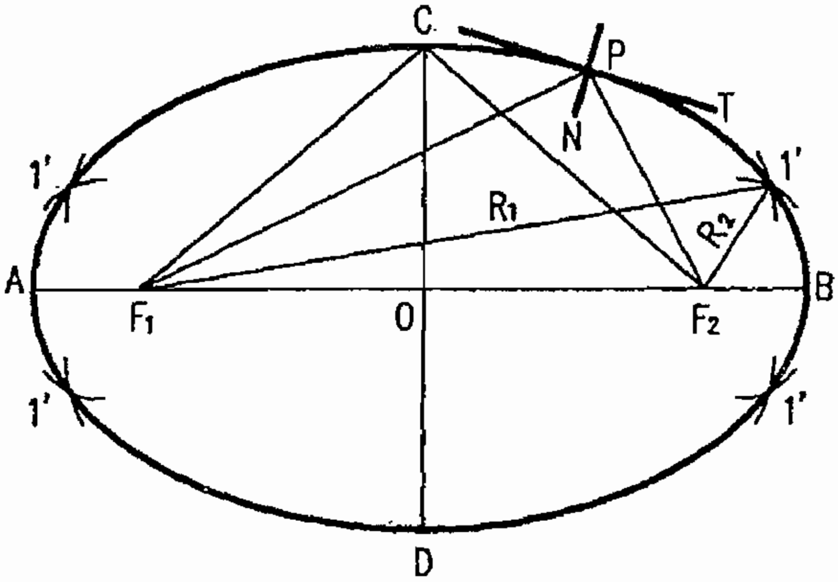

ELLIPSE - CONCENTRIC CIRCLES METHOD

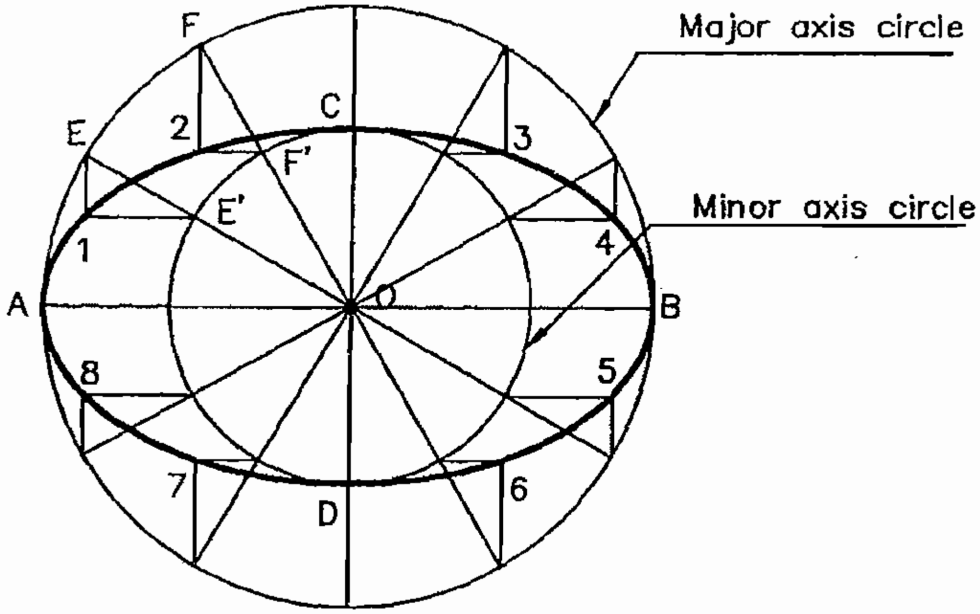

PARABOLA - RECTANGLE METHOD

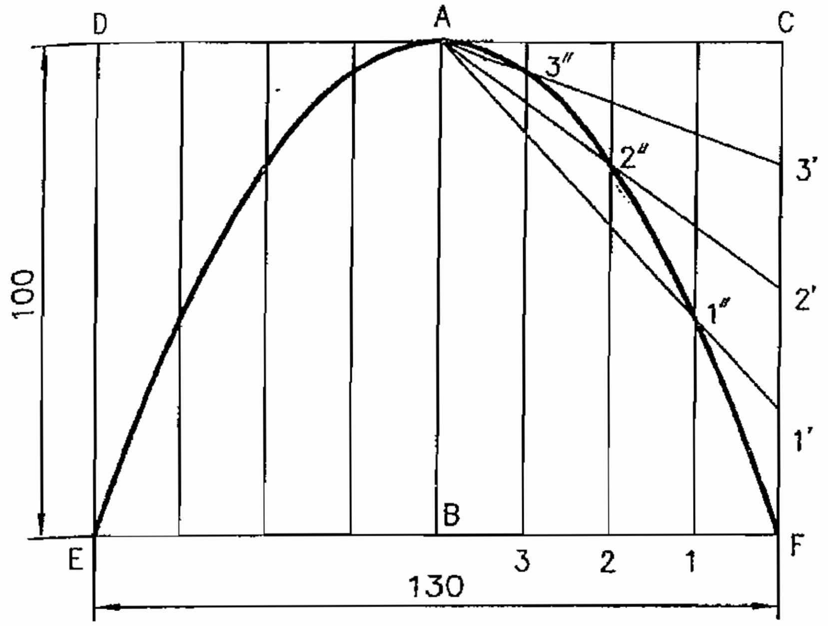

PARABOLA - TANGENT METHOD

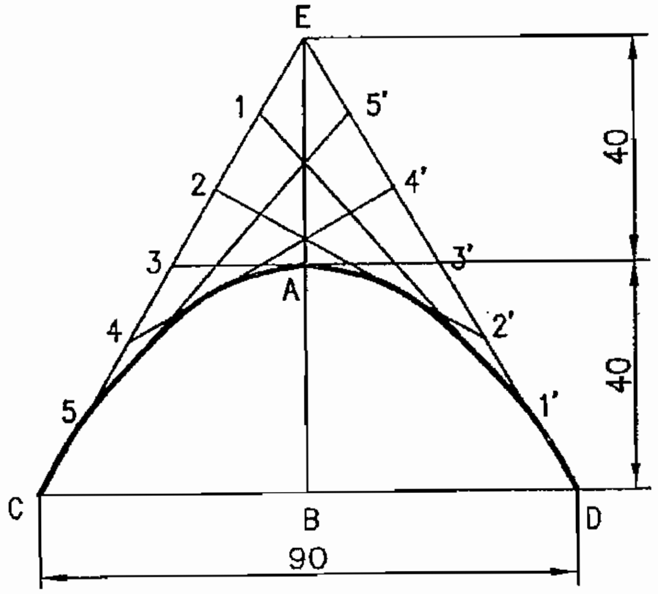

ALL DIMENSIONS ARE IN MILLIMETRES

HYPERBOLA

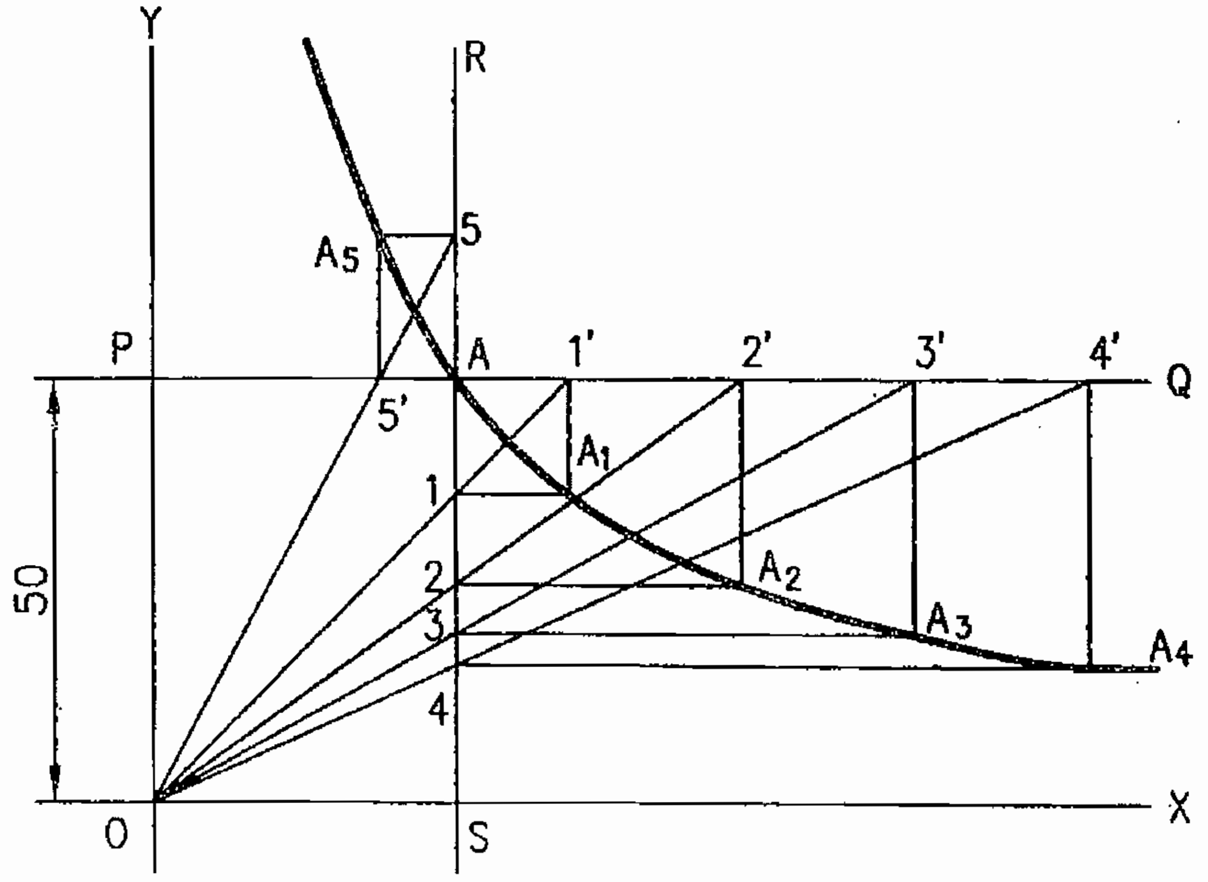

ALL DIMENSIONS ARE IN MILLIMETRES

05. CONVENTIONAL SYMBOLS OF MATERIALS

CONVENTIONAL SIGNS

MATERIAL	SYMBOL	MATERIAL	SYMBOL	MATERIAL	SYMBOL	MATERIAL	SYMBOL
EARTH		REINFORCED CEMENT CONCRETE		INDIAN TYPE W.C		SPECIAL BRICK	
SAND		TIMBER IN CROSS SECTION		PEDESTAL TYPE URINALS		ROCK	
BRICK		TIMBER IN LONGITUDINAL SECTION		URINAL STALL		LEAD,ZINC	
STONE		GLASS		CEILING FAN		STEEL,COPPER ALUMINIUM	
BRICK WORK IN ELEVATION		STAIR CASE		WATER PIPE LINE		ASBESTOS, FELT,ETC.	
PLAIN CEMENT CONCRETE		PLAIN KITCHEN SINK		PLASTER		PARTITION BLOCK	

06. SYMBOLS FOR DOORS AND WINDOWS

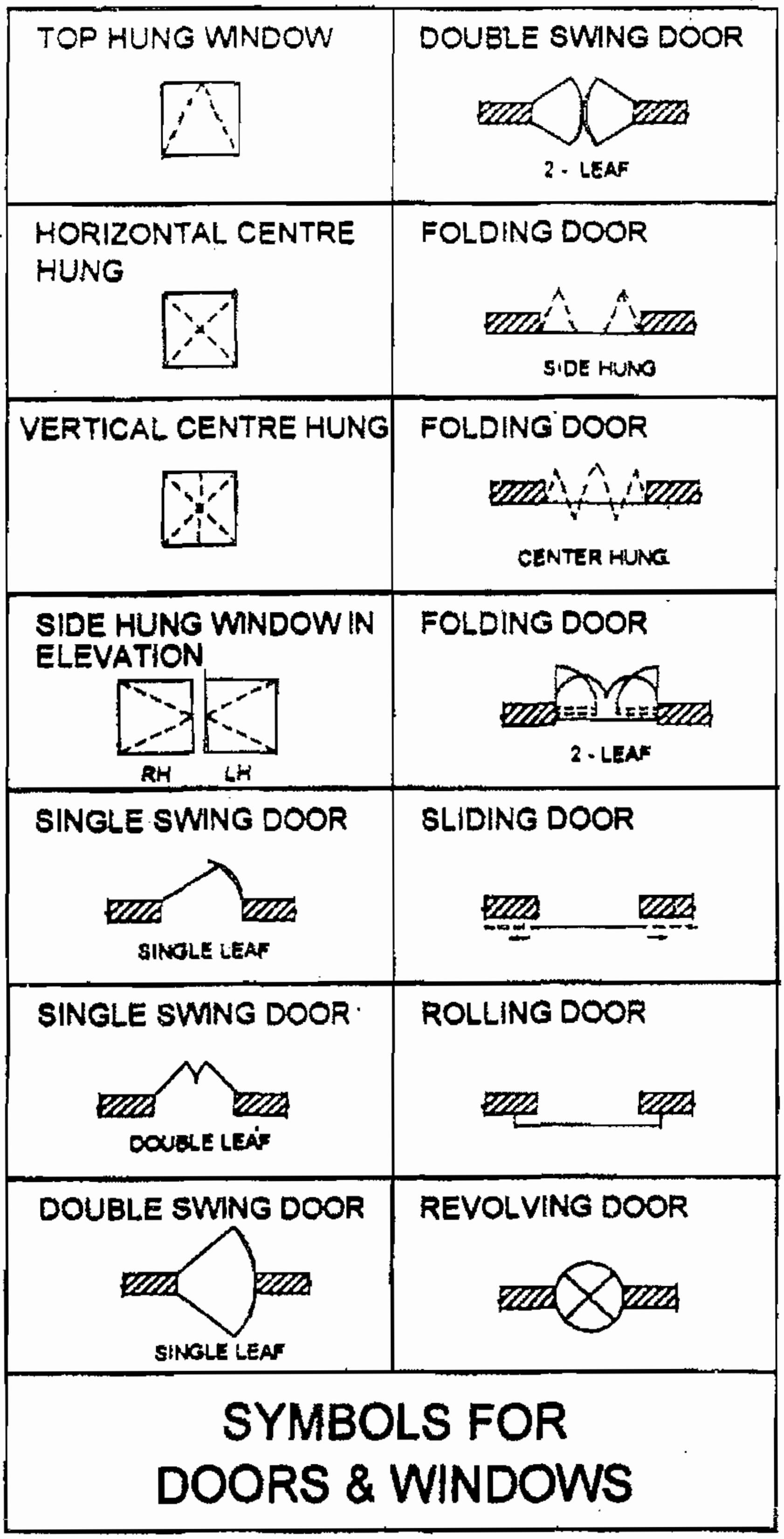

07. SYMBOLS FOR SANITARY FITTINGS

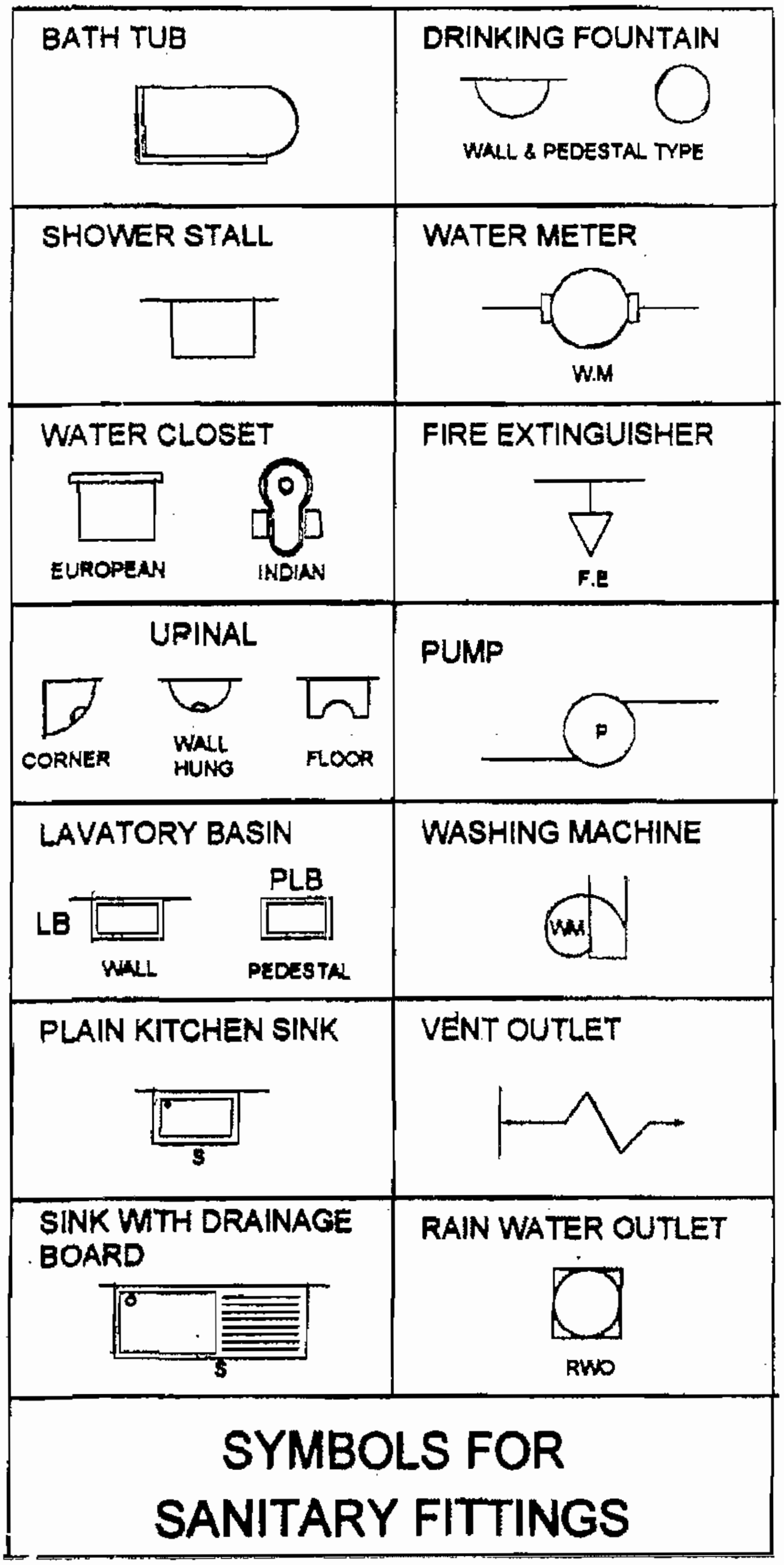

08. SYMBOLS FOR ELECTRICAL FITTINGS

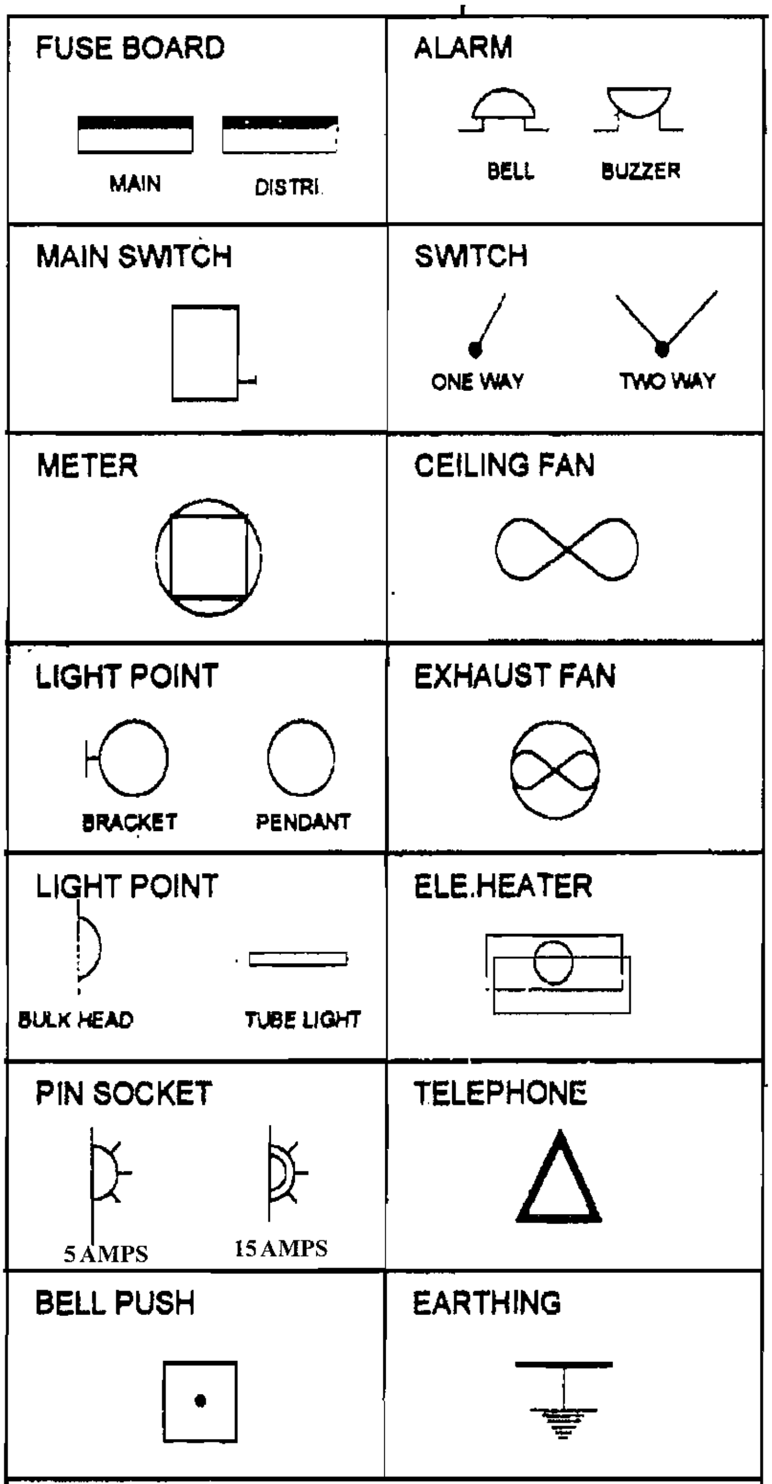

SYMBOLS FOR ELECTRICAL FITTINGS

09. ISOMETRIC VIEW & ORTHOGRAPHIC PROJECTIONS - MODEL – I

ISOMETRIC VIEW

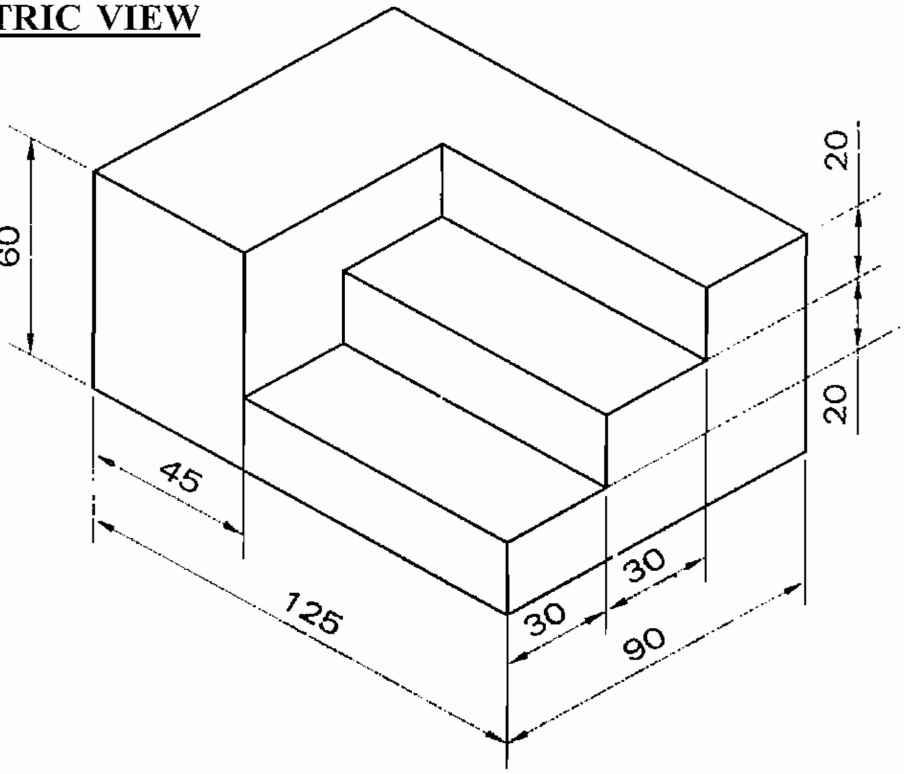

ISOMETRIC VIEW

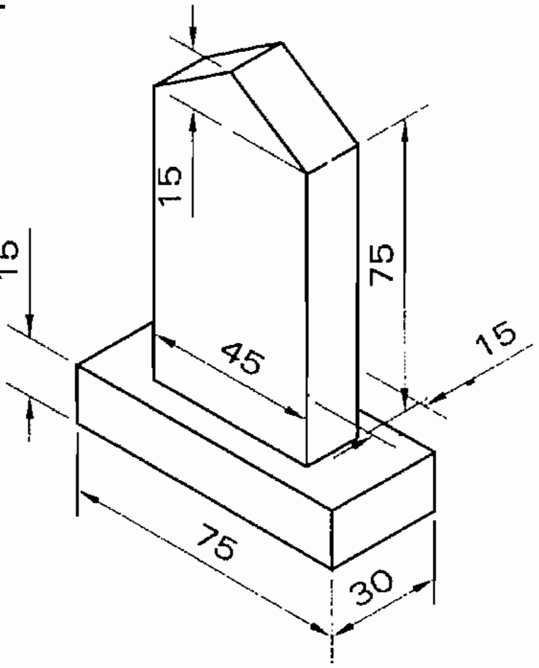

ALL DIMENSIONS ARE IN MILLIMETRES

10. ISOMETRIC VIEW & ORTHOGRAPHIC PROJECTIONS - MODEL – II

ISOMET

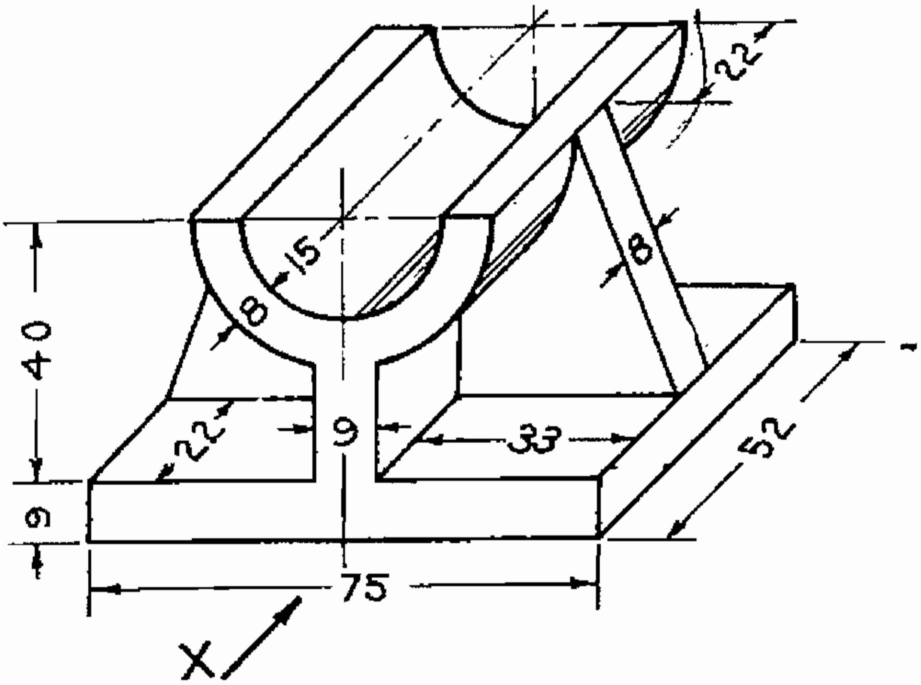

ISOMETRIC VIEW

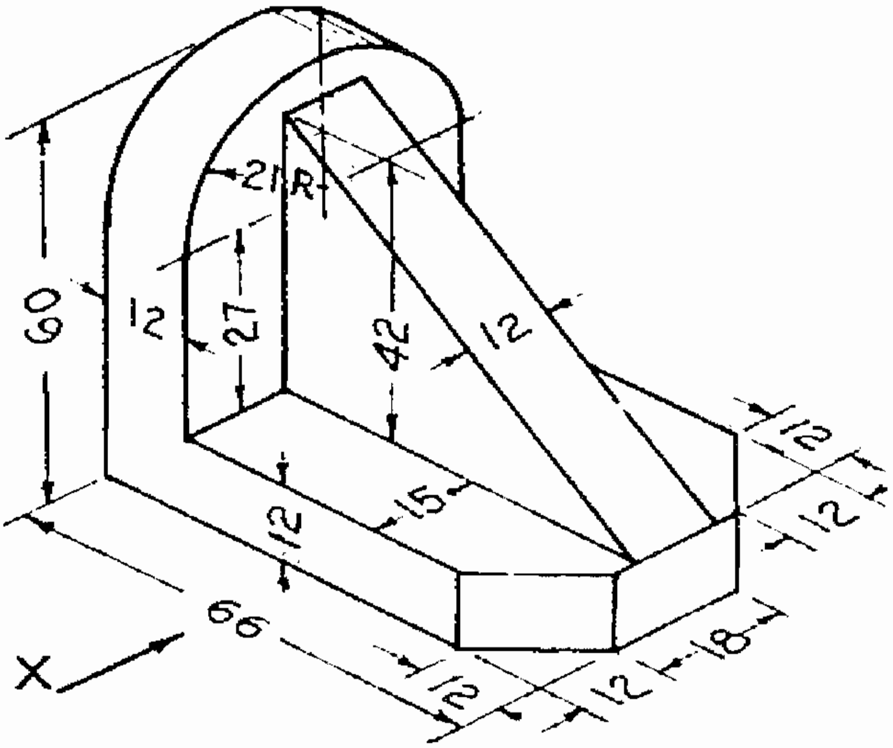

ALL DIMENSIONS ARE IN MILLIMETRES

11. BOND IN BRICK WORK – RIGHT ANGLED (ENGLISH BOND (OR) FLEMISH BOND)

ENGLISH BOND

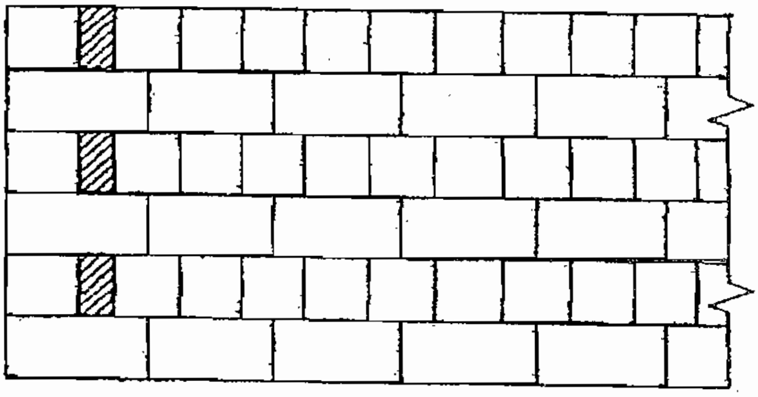

ELEVATION

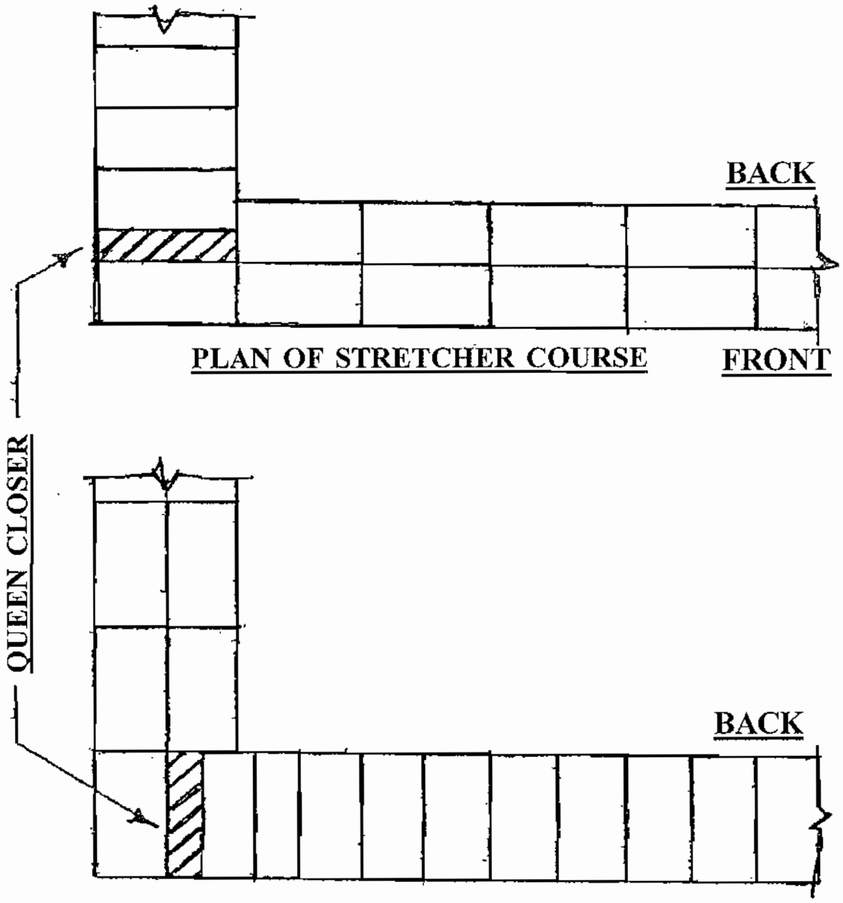

PLAN OF STRETCHER COURSE

PLAN OF HEADER COURSE

ONE BRICK WALL - 20 CM

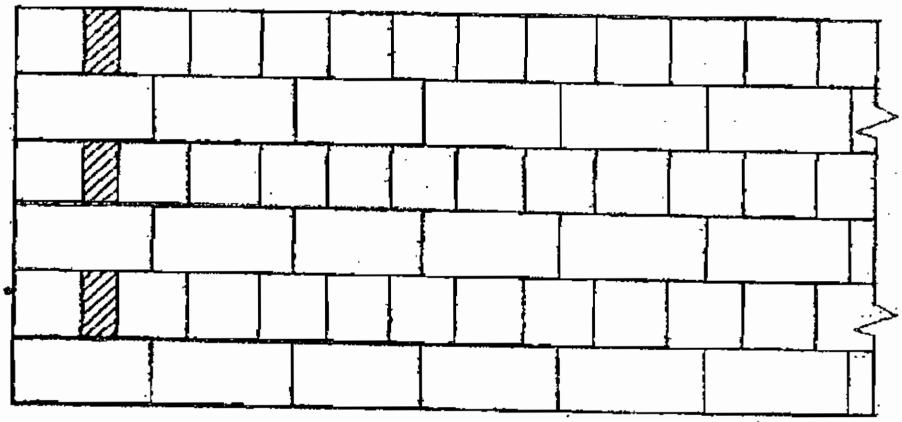

ELEVATION

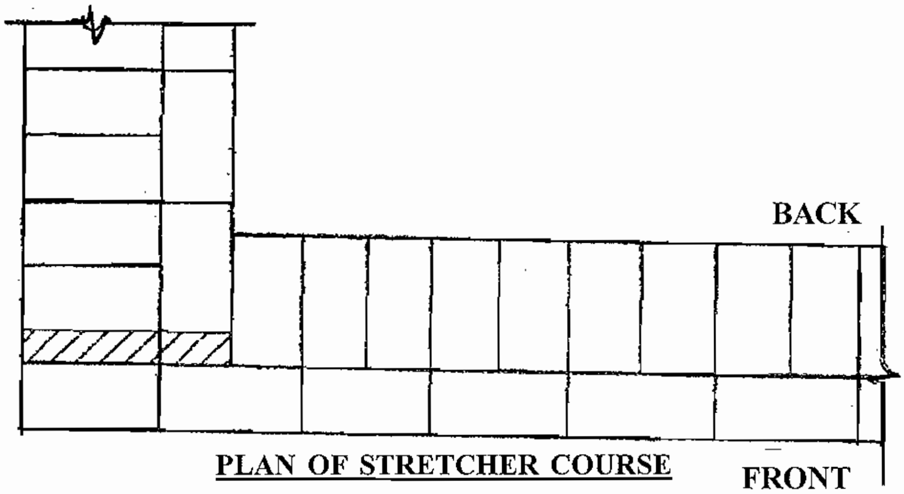

PLAN OF STRETCHER COURSE

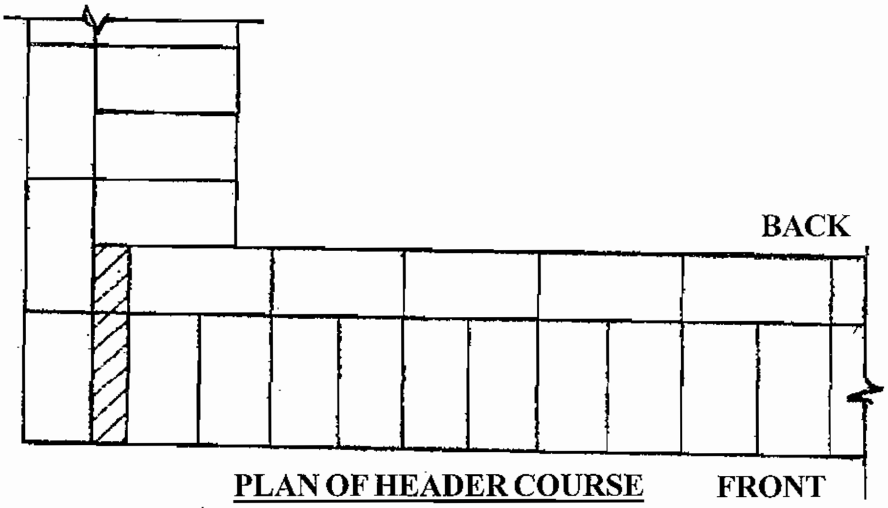

PLAN OF HEADER COURSE

ONE AND HALF BRICK WALL - 30 CM.

FLEMISH BOND

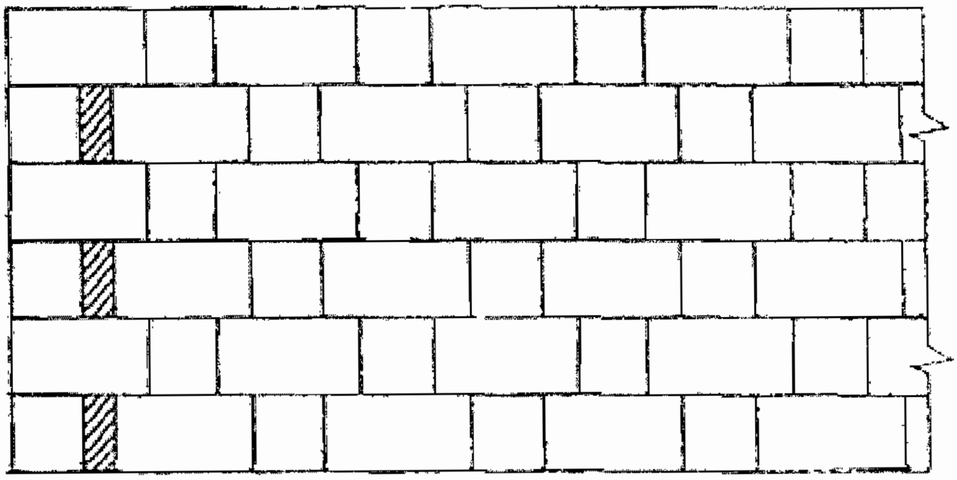

FRONT ELEVATION

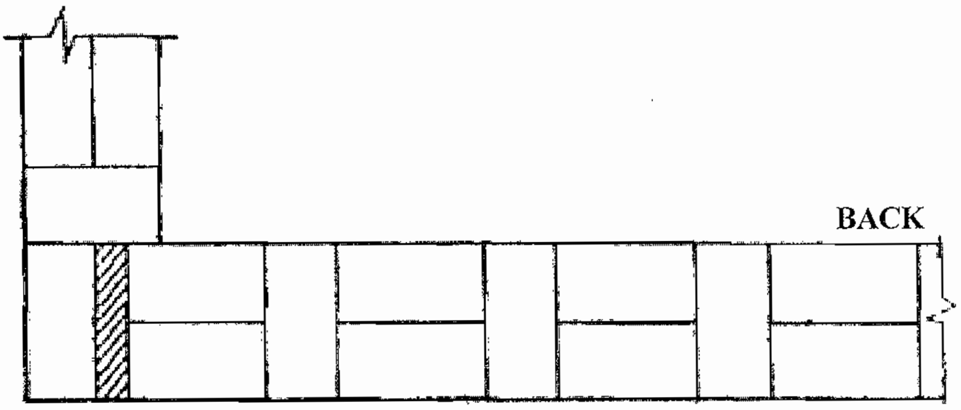

ONE BRICK WALL

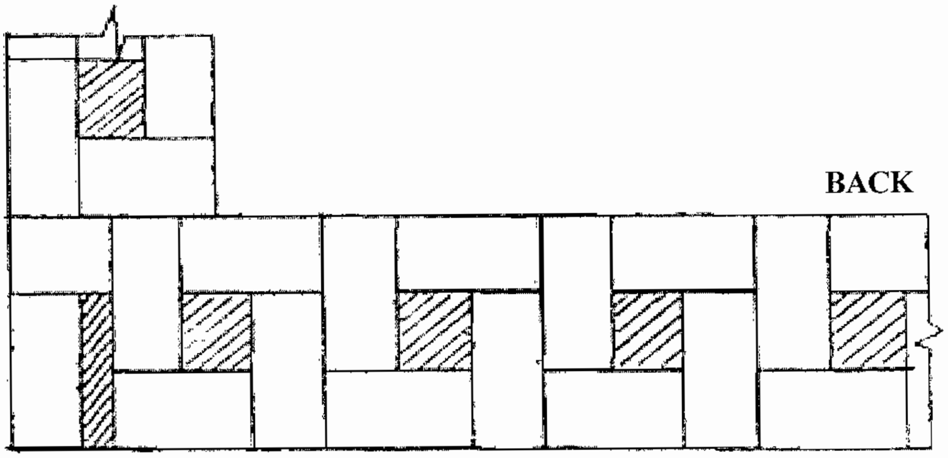

ONE & HALF BRICKS WALL

PLAN - ODD COURSE

FLEMISH BOND

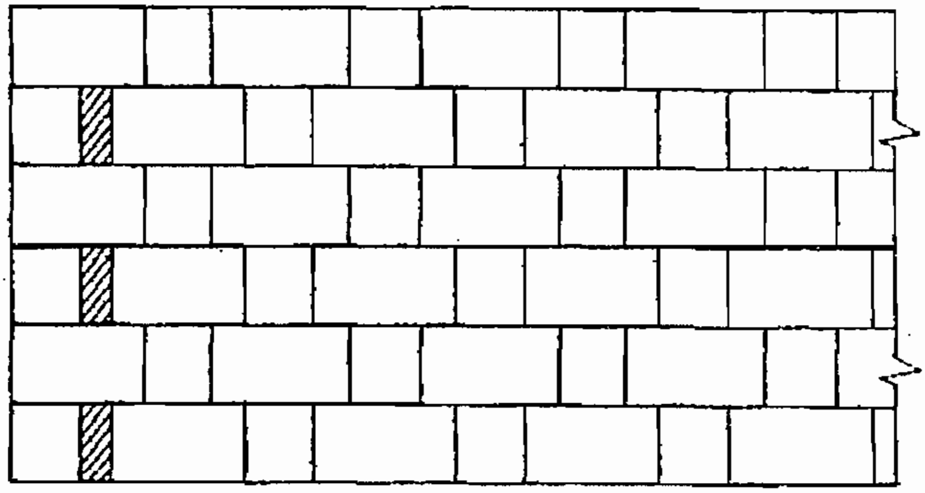

FRONT ELEVATION

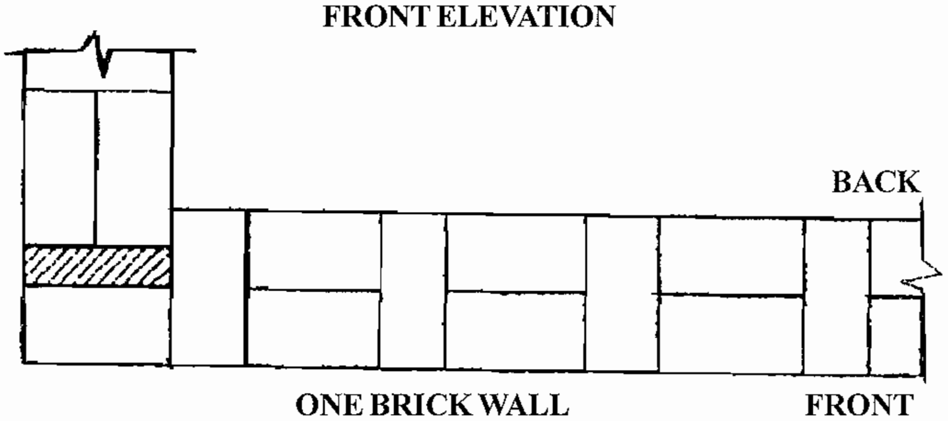

ONE BRICK WALL

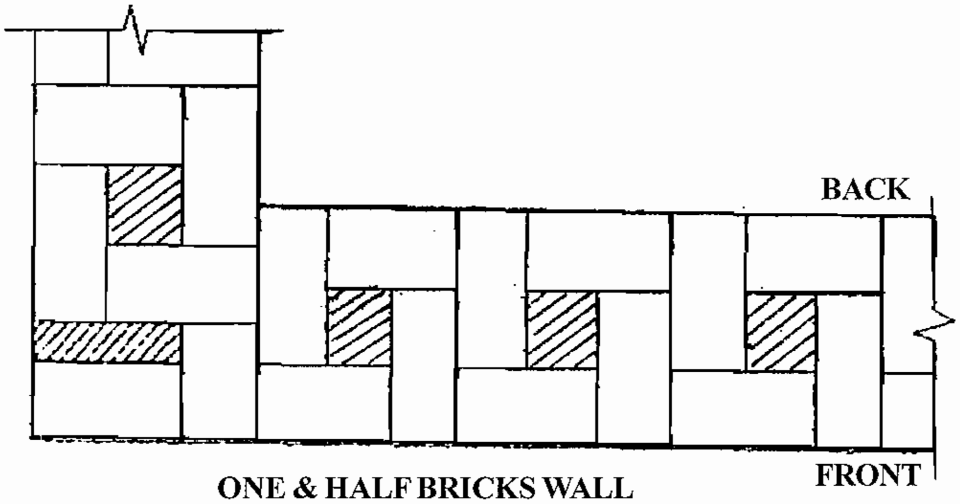

ONE & HALF BRICKS WALL

PLAN - EVEN COURSE

12. SECTION OF FOUNDATION (TYPES OF FOOTINGS OF WALL AND FOUNDATION DETAILS FOR STEPS AND WALL)

FOUNDATION

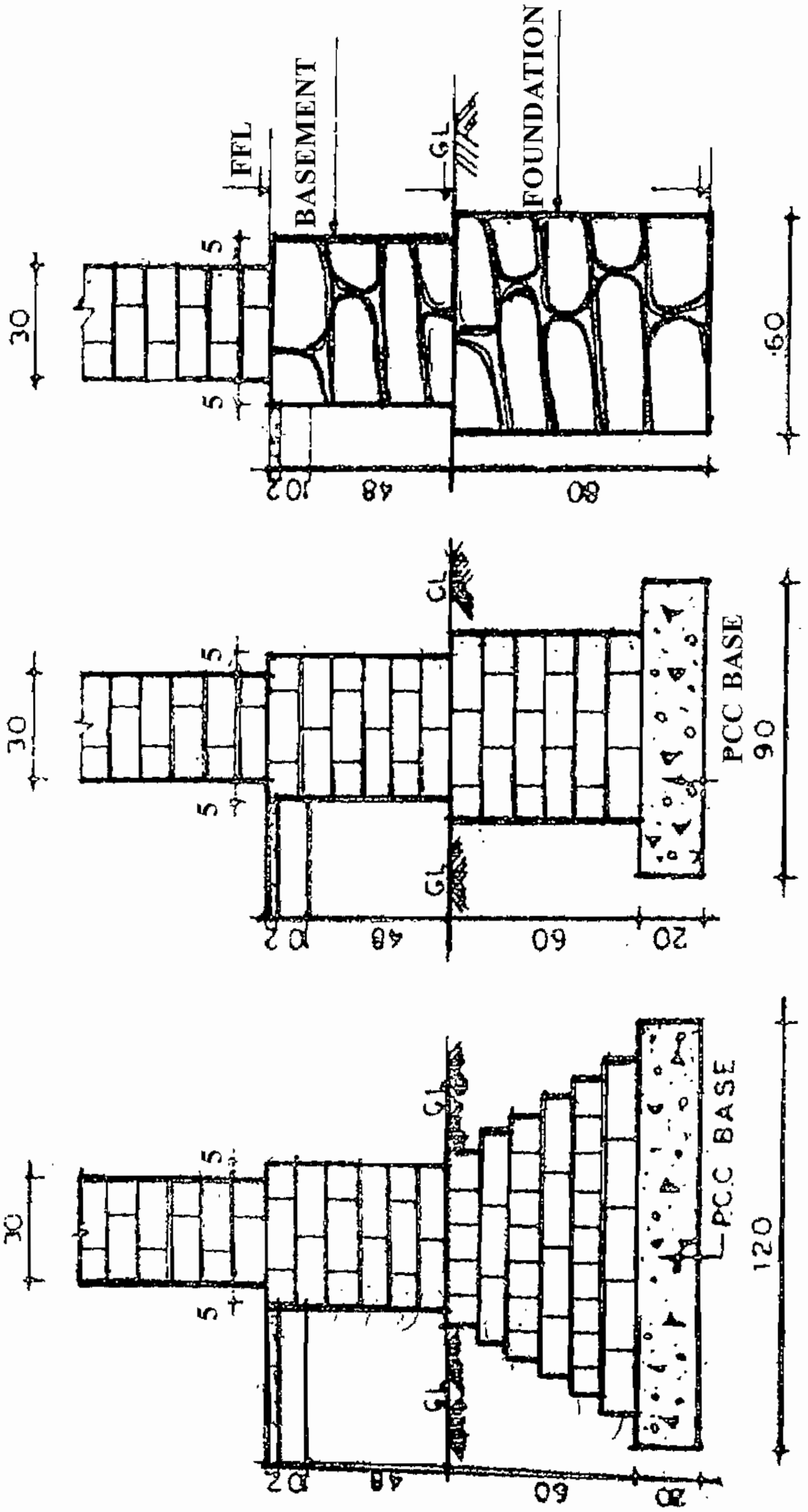

TYPES OF FOOTINGS FOR WALLS

DIMENSIONS IN CENTI METRES

FOUNDATION

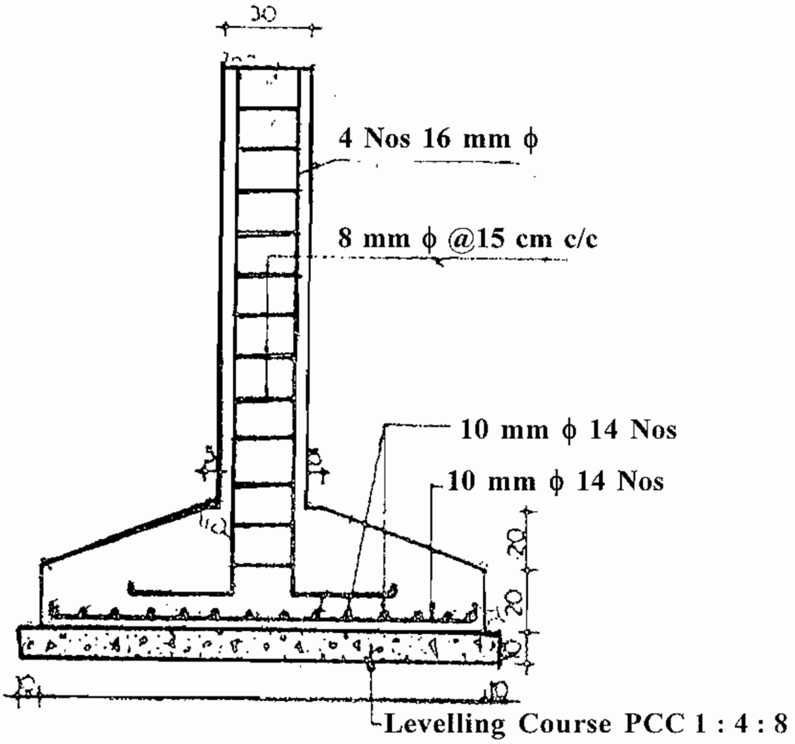

SECTION AA

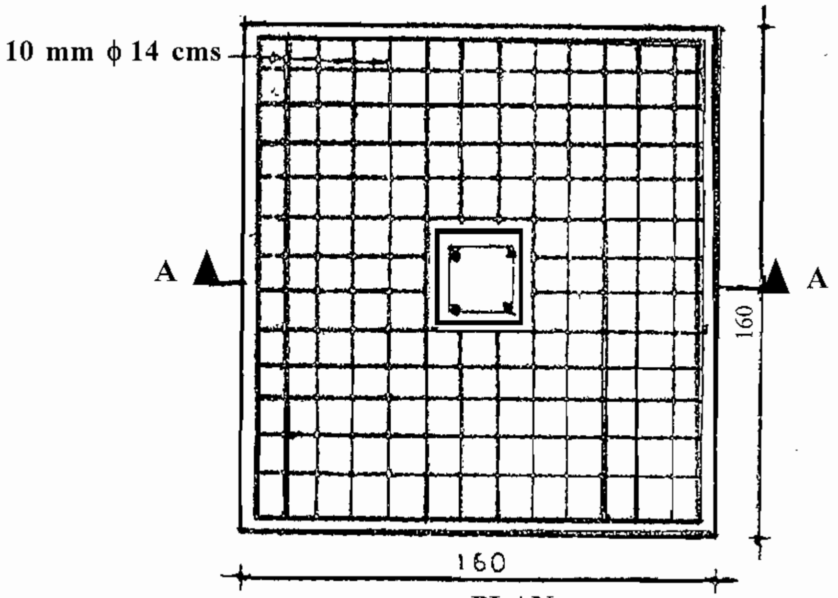

PLAN

SHOWING ARRANGEMENT OF REINFORCEMENT

FOOTINGS FOR A RCC COLUMN

DIMENSIONS IN CENTI METRES

FOUNDATION AND STEPS

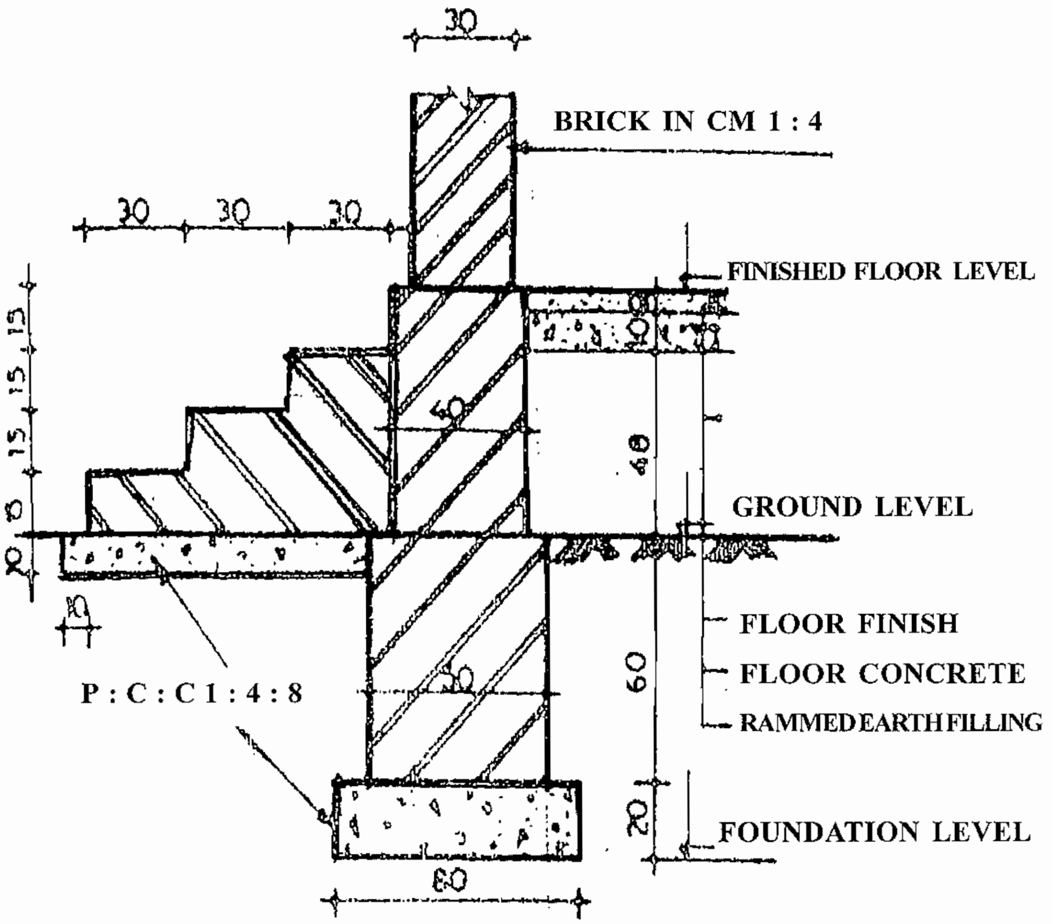

FOUNDATION DETAILS FOR STEPS AND WALL

DIMENSIONS IN CENTI METRES

13. ARCHES (FLAT, SEMI CIRCULAR, ELLIPTICAL AND SEGMENTAL ARCH)

DEVELOPMENT OF ARCH

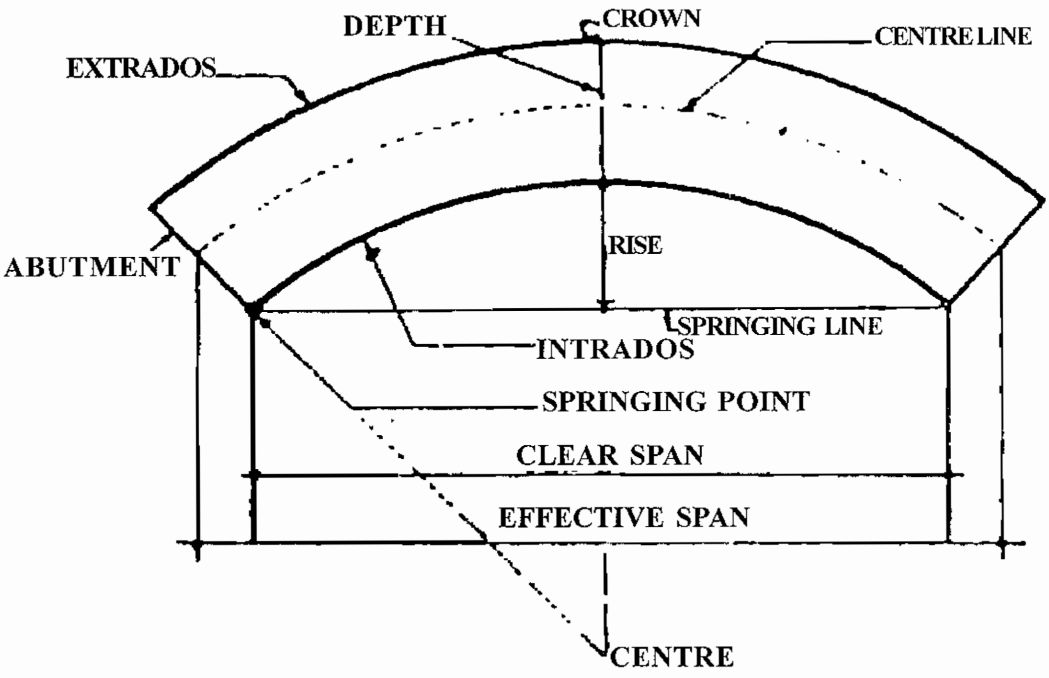

CIRCULAR SEGMENTAL ARCH

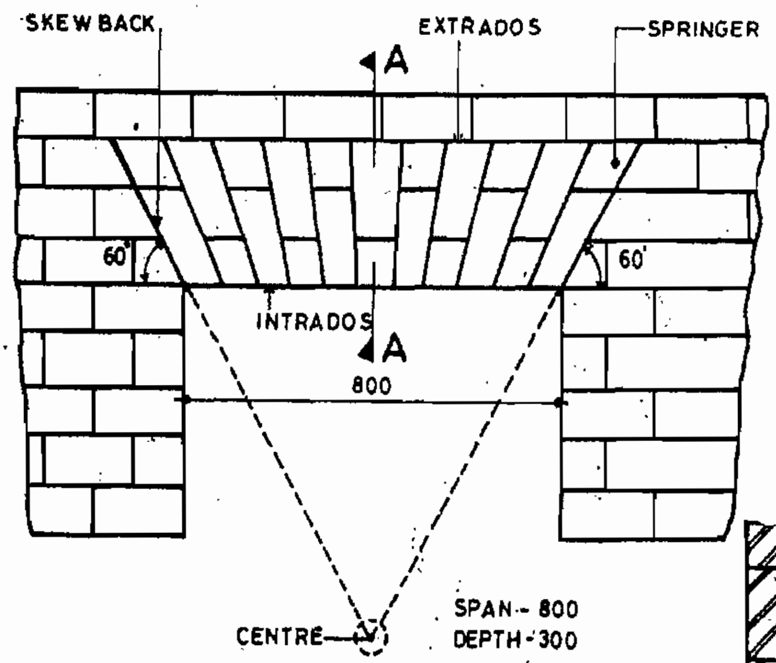

FLAT ARCH

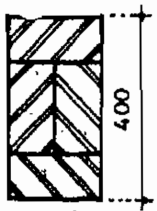

SECTION ON AA

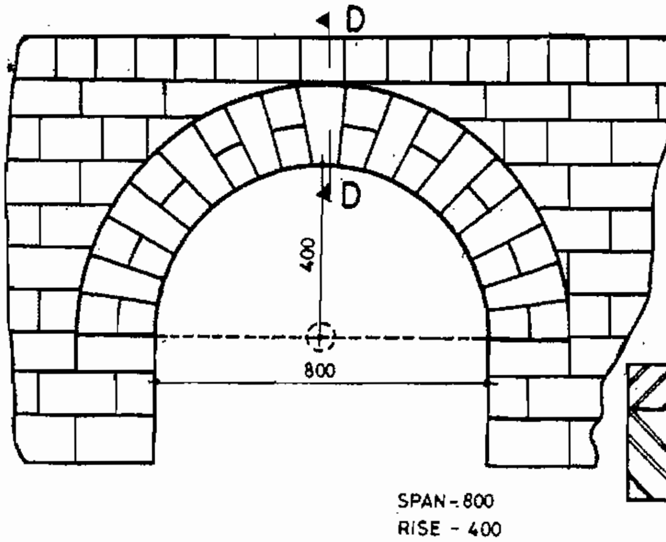

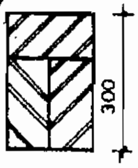

SEMICIRCULAR ARCH

SECTION ON DD

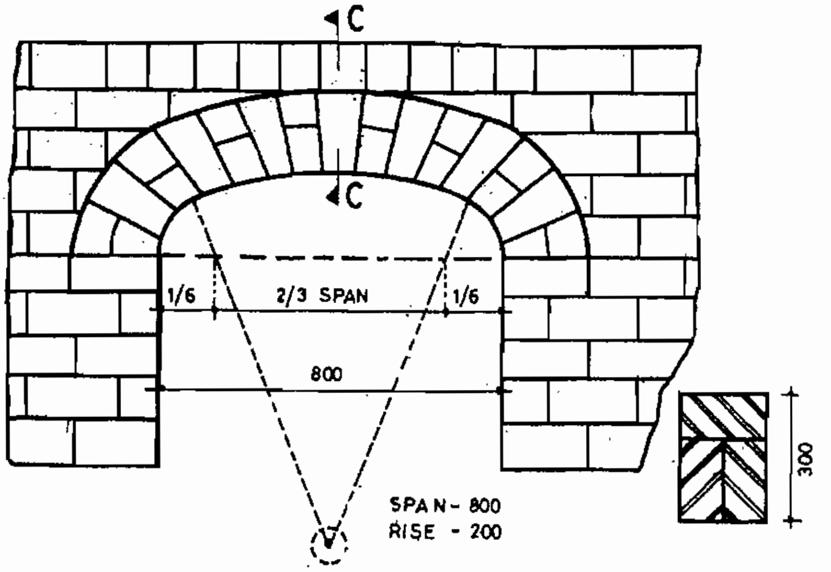

ELLIPTICAL ARCH
(3-CENTRED)

SECTION ON CC

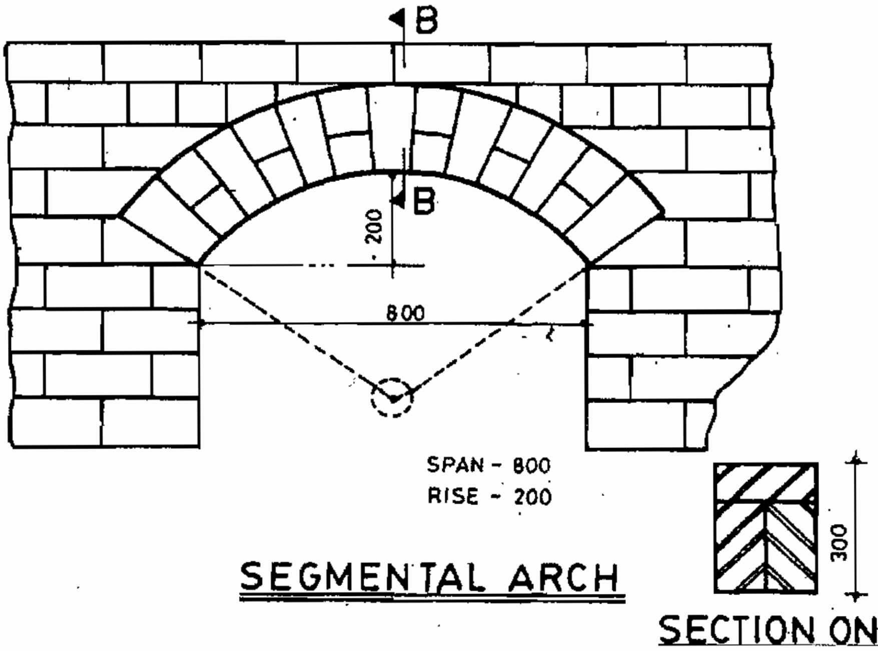

SEGMENTAL ARCH

SECTION ON BB

14. PANEL DOOR

DEVELOPMENT OF DOOR

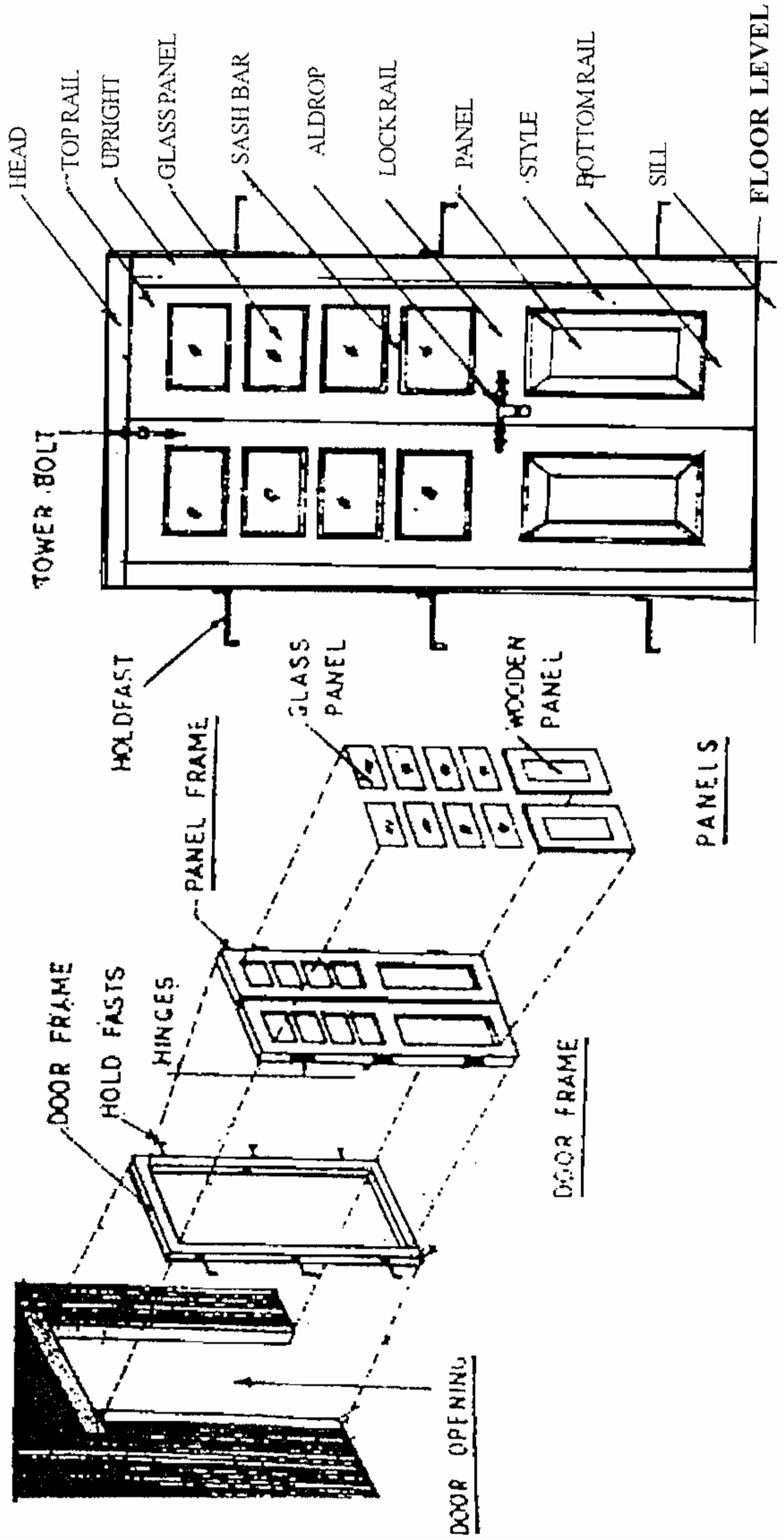

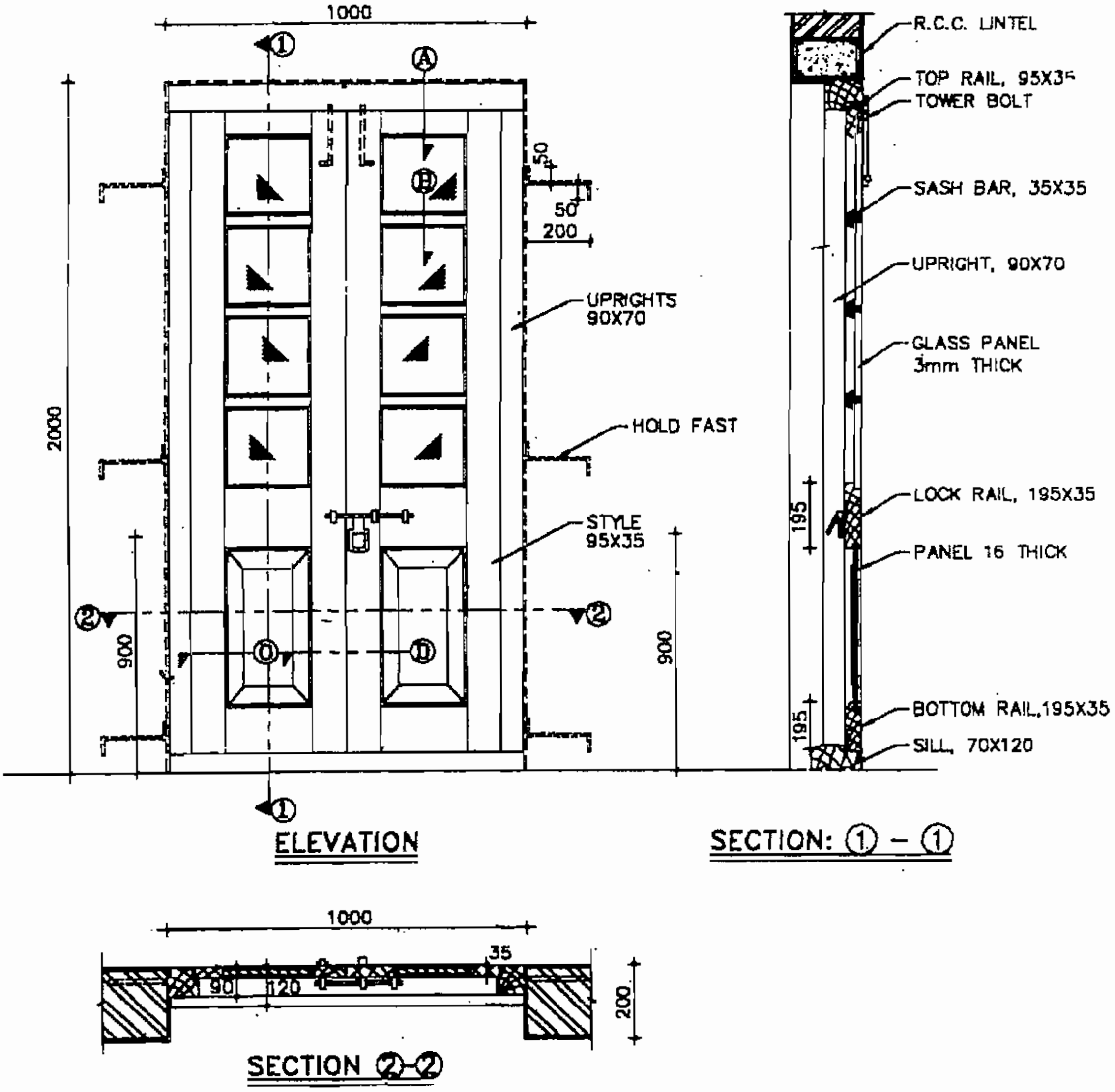
1000
2000
900
50
200
UPRIGHTS 90X70
HOLD FAST
STYLE 95X35
ELEVATION
R.C.C. LINTEL
TOP RAIL, 95X35
TOWER BOLT
SASH BAR, 35X35
UPRIGHT, 90X70
GLASS PANEL 3mm THICK
LOCK RAIL, 195X35
PANEL 16 THICK
BOTTOM RAIL,195X35
SILL, 70X120
195
SECTION: ① – ①
90
120
35
SECTION ②-②

PANEL DOOR

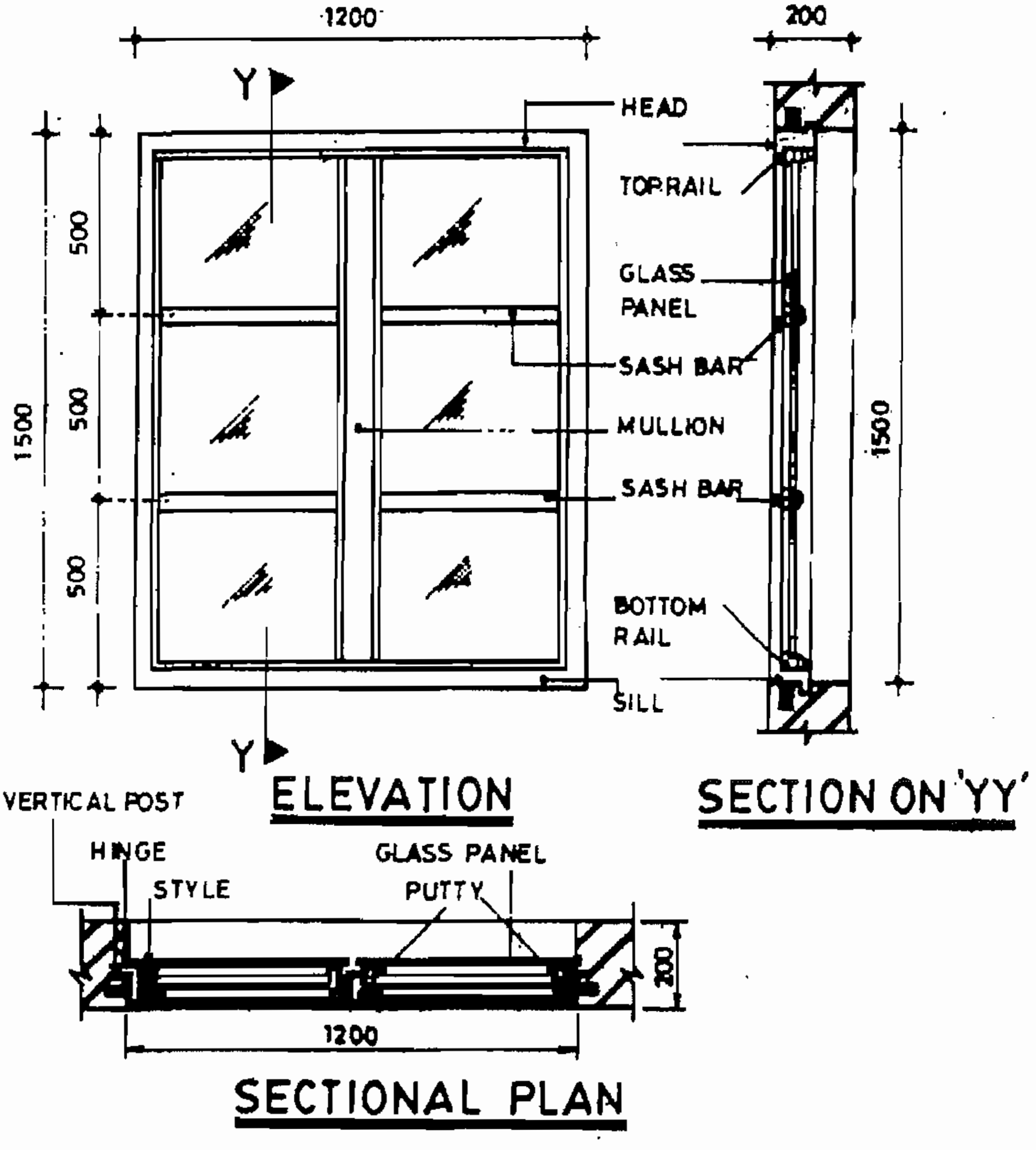

GLAZED WINDOW

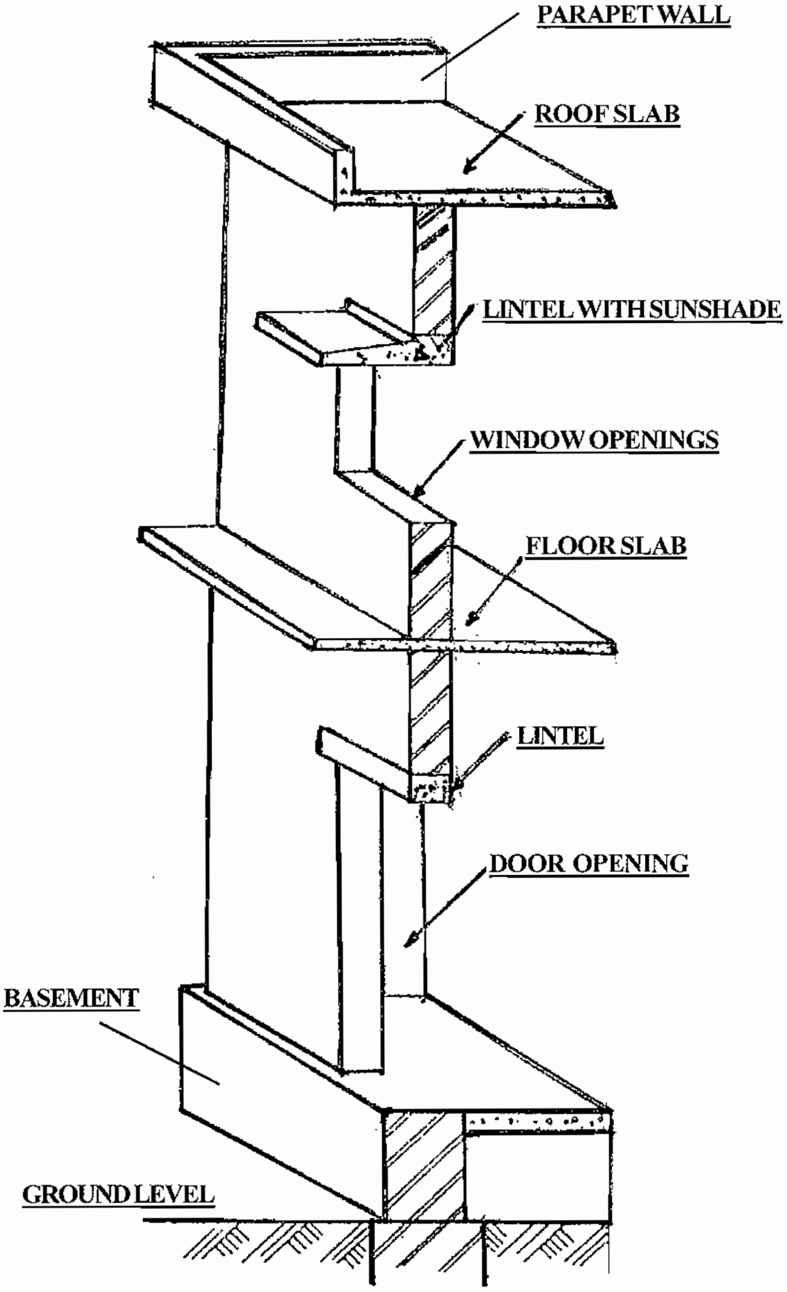

WALL SECTION SHOWING LINTELS OVER WALL OPENINGS

PRACTICAL II
(LAB)

PRACTICAL II

FOR STUDENTS ATTENTION...

1. Before coming to the laboratary discuss the experiment with friends and plan well by reading this hand book.

2. Write the required observation thoroughly in the observation note before coming to the laboratary.

3. Date, Experiment No, Aim, Appratus required, Equation, Procedure and Result should be written on the right side of the observation note / record note. Figure, tabular column, observation and calculation should be written on the left side.

4. After completing the experiment in the laboratary the noted observation should be shown to the teacher and get the signature.

5. Note the measurement (gram, cm, mm ......) in the same unit as measured. Final calculation should be only in SI units.

   Note the result in SI Units.

01. DETERMINE THE NORMAL CONSISTENCY OF THE GIVEN CEMENT SAMPLE

NORMAL CONSISTENCY TEST

Aim

To find the normal consistency of the given sample of cement.

Appratus and materials required

1. Vicat's apparatus
2. 10mm dia plunger
3. Mould
4. Non porous plate
5. Weighing balance
6. Measuring jar and water
7. A Container
8. Trowel
9. Clock
10. Cement sample (400 grams)

Procedure

1. Take 400 grams of cement
2. Add 20% of water ($\frac{20}{100} \times 400 = 80$ ml) to the cement and prepare the paste.
3. Fix the plunger with the vicat's apparatus and adjust the pointer to pointout zero when the plunger is placed above the non porous plate.
4. Fill the prepared paste in the mould and place it above the plate.
5. Bring the plunger just above the paste and allow it to penetrate the paste freely.
6. Note down weather the pointer points towards 5mm to 7mm on the vicat's scale.
7. If not, repeat the above steps by increasing the percentage of water.
8. Note the percentage of water for which the pointer points 5mm to 7mm on the scale. That is the percentage of normal consistency for that cement sample.

Table

S.No.	Percentage of water	Amount of water added	Pointers Reading
1			
2			
3			
4			
5			

Result

The Normal Consistency for the given cement sample is _________%.

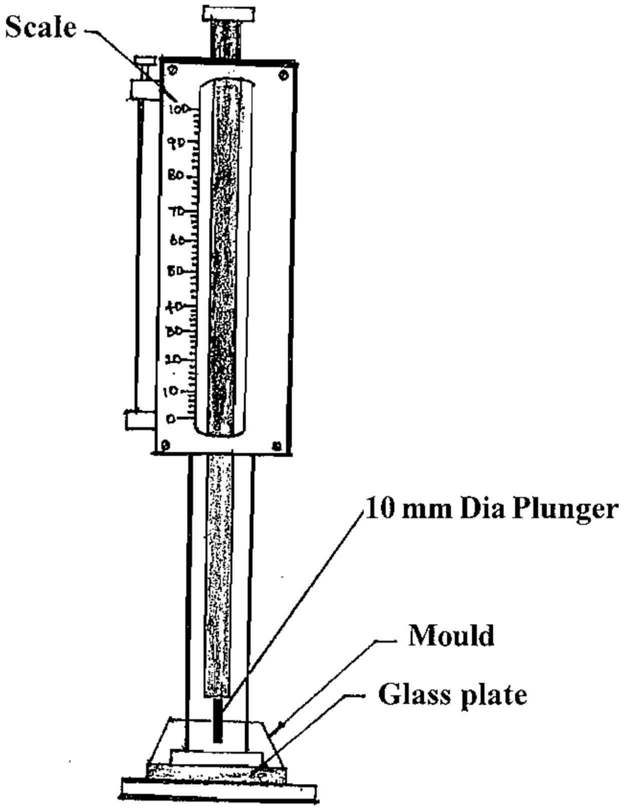

VICAT'S APPARATUS

02. DETERMINE THE INITIAL SETTING TIME OF THE GIVEN CEMENT SAMPLE

INITIAL SETTING TIME TEST

Aim

To find out the initial setting time of given sample of cement

Apparatus and Materials required

1. Vicat's apparatus
2. Needle (1 sq mm in c/s)
3. Mould
4. Non porous plate
5. Weighing balance
6. Measuring jar and water

Procedure

1. Take 400 gms of cement. Add 0.85 times of normal consistency of water. Note the time of adding water.
2. Fix the initial setting time needle with the apparatus and adjust the pointer to point zero when the needle is placed above the plate.
3. Fill the prepared paste in the mould and place it above the plate.
4. Bring the square needle just above the paste and allow it to penetrate the paste. Note the measurement on the scale. In the beginning it penetrates completely. It is then taken out and dropped at a new place. The procedure is repeated until the pointer 5mm to 7mm in the vicat's scale.
5. Note the time. Initial setting time of cement is the time from the addition of water, till the penetration is between 5mm – 7mm from the bottom.

Observations

Wt. of cement sample	=	400 grams
Percentage of water added	=	0.85 x Normal consistency value

S.No.	Time (in minutes)	Pointer's reading (In mm)
1		
2		
3		
4		
5		

Result

The initial setting time of the given cement sample is _________ minutes.

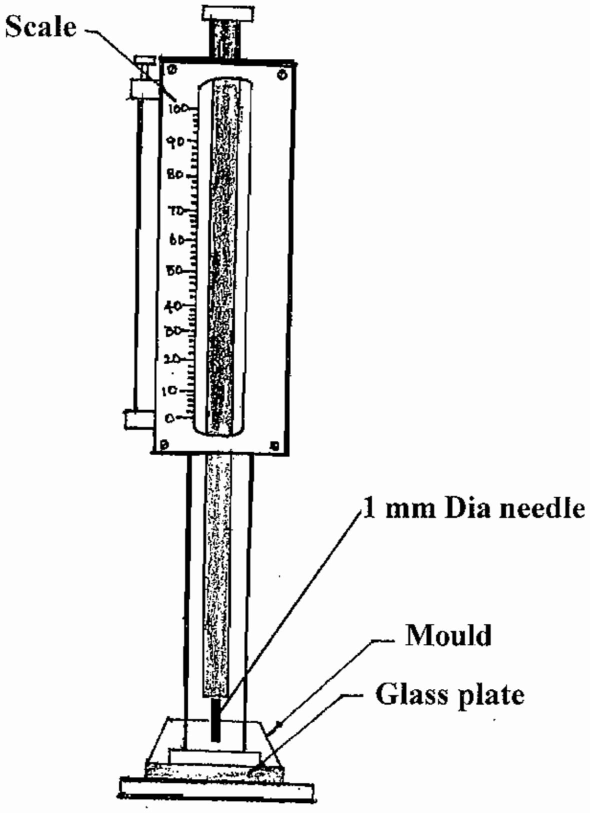

VICAT'S APPARATUS

03. DETERMINE THE FINENESS VALUE OF THE GIVEN CEMENT SAMPLE

FINENESS TEST

Aim

To find out the fineness of the given sample of cement.

Materials and apparatus required

1. I.S. sieve No. 9 (90 micron)
2. Weighing balance
3. Trowel
4. Cement sample (100 gms)

Procedure

1. 100 gms of cement is taken using weighing balance. Let it be 'W_1' gms.
2. The cement is placed in the I.S. 90 micron sieve and the sieve is shaked for about 15 minutes.
3. The residue in the sieve is taken and weighed using weighing balance. Let it be 'W_2' gms.
4. The percentage of residue is worked out by using the formula

$$\frac{W_1 - W_2}{W_1} \times 100$$

Note

The residue should not exceed 10% for ordinary Portland cement and 5% for rapid hardening cement.

Observations

Wt of cement sample taken (W_1) =

Wt of residue in the sieve (W_2) =

Fineness value $= \frac{W_1 - W_2}{W_1} \times 100$

Result

The fineness value of the given cement sample is _________%.

04. DETERMINE THE VOID RATIO OF THE GIVEN SAND SAMPLE

VOID RATIO

Aim

To determine the voids ratio in the given sand sample.

Definition

Void ratio represent the ratio between the volume of voids and the total volume including solid matters and voids.

$$\text{Voids ratio 'e'} = \frac{\text{Volume of voids}}{\text{Volume of solids}}$$

Apparatus and materials required

1. Spring balance
2. Bucket
3. Sand
4. Water
5. 16mm dia, 600mm length tamping rod

Procedure

1. Take a clean dry bucket and weigh it (W_1 grams)
2. Take about $1/3^{rd}$ bucket of clean sand and tamping the sand 25 times. Do the same against two times fill the bucket.
3. Weigh the bucket with sand (W_2 grams)
4. Take bucket with sand and fill it with water and weigh it. (W_3 grams)
5. Empty the bucket fill it with water and weigh it. (W_4 grams)

Observation

1. Weight of the empty bucket	(W_1 grams)	=
2. Weight of the (bucket + sand)	(W_2 grams)	=
3. Weight of the (bucket + sand + water)	(W_3 grams)	=
4. Weight of the (bucket + water)	(W_4 grams)	=

Voids ratio 'e' $= \dfrac{W_3 - W_2}{(W_4 - W_1) - (W_3 - W_2)}$

Result

Voids of the given sand sample is = ____________________

Soil Phase Diagram

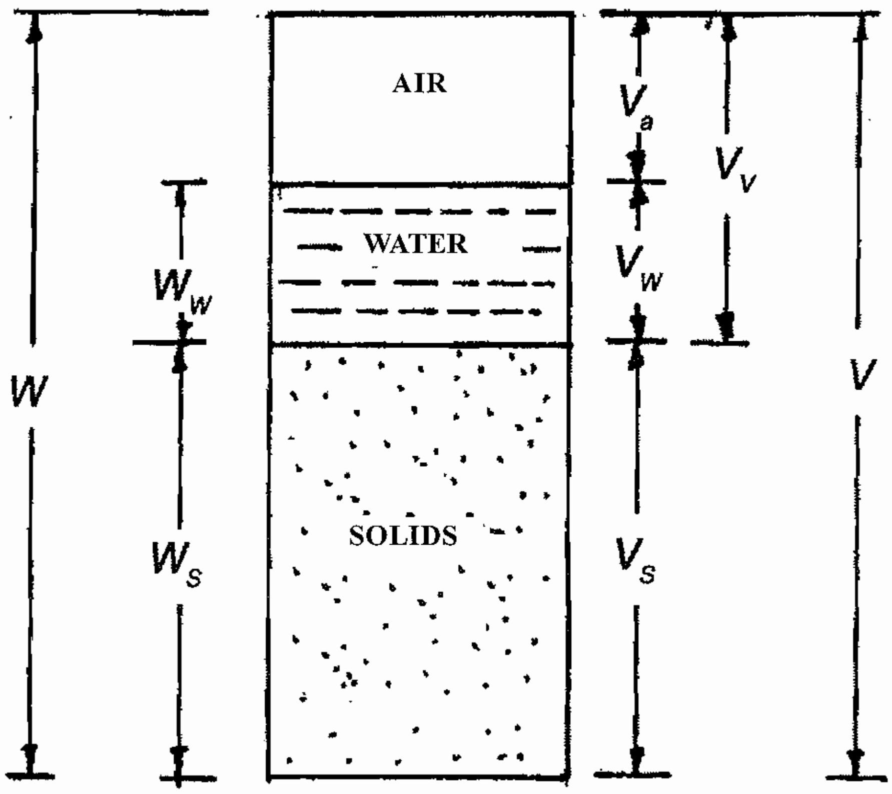

Soil Phase Diagram

05. DETERMINE THE POROSITY OF THE GIVEN SAND SAMPLE

POROSITY

Aim

To determine the Porosity in the given sand sample.

Definition

Porosity of the given sand sample is ratio of the volume of voids to the total volume of given sand mass. It has no unit.

$$\text{Porosity 'n'} = \frac{\text{Volume of voids}}{\text{Total Volume of sand}}$$

Apparatus and materials required

1. Spring balance
2. Bucket
3. Sand
4. Water
5. 16mm dia, 600mm length tamping rod

Procedure

1. Take a clean dry bucket and weigh it (W_1 grams).
2. Take about 1/3rd bucket of clean sand and tamping the sand 25 times. Repeat the samething by filling the bucket 2/3 & 3/3 with clean sand.
3. Weighing the bucket with sand (W_2 grams)
4. Take bucket with sand and fill it with water and weigh it. (W_3 grams)
5. Now empty the bucket fill it with water and weigh it. (W_4 grams)

Observation

1. Weight of the empty bucket (W_1 grams) =
2. Weight of the (bucket + sand) (W_2 grams) =
3. Weight of the (bucket + sand + water) (W_3 grams) =
4. Weight of the (bucket + water) (W_4 grams) =

$$\text{Porosity 'n'} = \frac{(W_3 - W_2)}{(W_4 - W_1)} \times 100$$

Result

Porosity of the given sand sample is = ____________________.

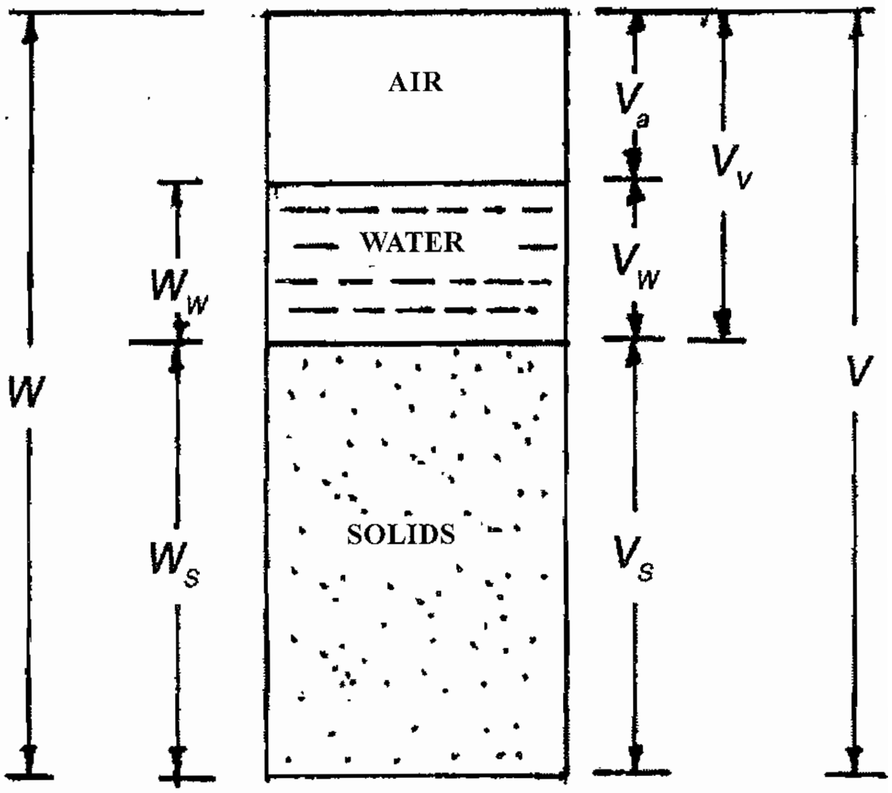

Soil Phase Diagram

06. DETERMINE THE BULK DENSITY OF THE GIVEN SAND SAMPLE.

BULK DENSITY

Aim

To determine the Bulk density of the given sand sample.

Definition

Bulk density of the given sand sample is ratio between the weight of sand and its volume. (Unit = gram / cc)

$$\text{Bulk Density 'Y'} = \frac{\text{Weight of sand}}{\text{Volume of sand}}$$

Apparatus and materials required

1. Spring balance
2. Bucket
3. Sand
4. Water
5. 16mm dia, 600mm length tamping rod

Procedure

1. Take a clean dry bucket and weigh it (W_1 grams).
2. Take about $1/3^{rd}$ bucket of clean sand and tamping the sand 25 times. Do the same against two times fill the bucket.
3. Weighing the bucket with sand (W_2 grams)
4. Take the bucket with 1/3 rd of clean sand and tamping the sand 25 times. Repeat the samething by filling the bucket 2/3 & 3/3 with clean sand.
5. Now empty the bucket fill it with water and weigh it. (W_4 grams)

Observation

1.	Weight of the empty bucket	(W_1 grams)	=
2.	Weight of the (bucket + sand)	(W_2 grams)	=
3.	Weight of the (bucket + sand + water)	(W_3 grams)	=
4.	Weight of the (bucket + water)	(W_4 grams)	=

Bulk density 'Y' = $\dfrac{W_2 - W_1}{W_4 - W_1}$

Result

Bulk density of the given sand sample is = ____________________.

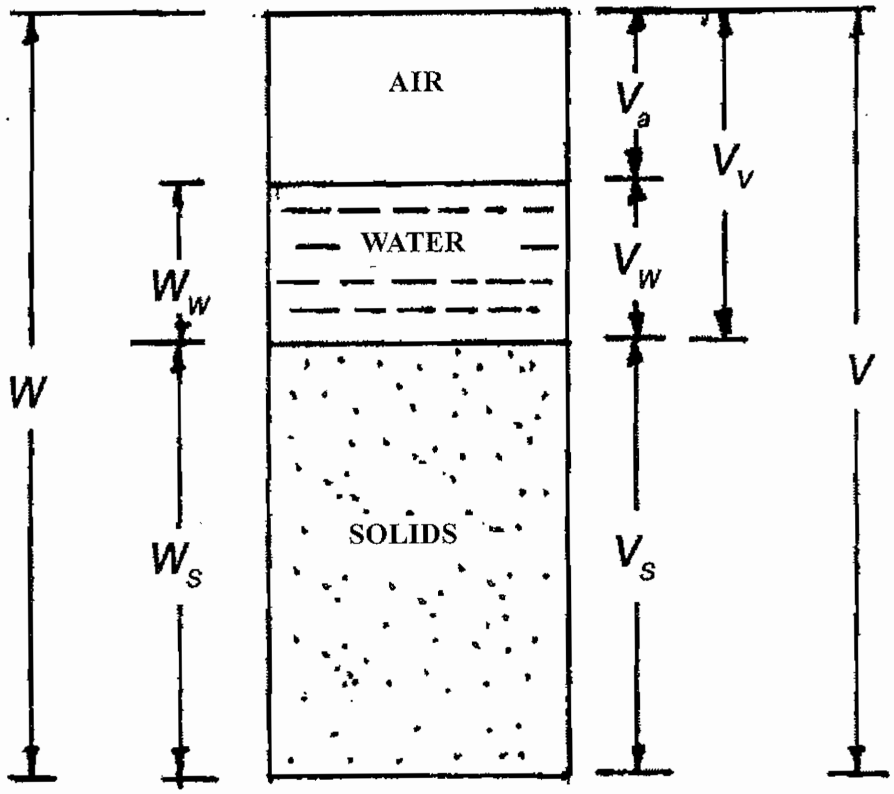

Soil Phase Diagram

07. WATER ABSORPTION TEST ON COARSE AGGREGATE

WATER ABSORPTION - COARSE AGGREGATE

Aim

To determine the percentage of water absorption of given sample of coarse aggregate.

General Introduction

Water absorption test is one of the tests to determine the quality of coarse aggregate. It gives an idea of strength of coarse aggregate.

Apparatus and Materials required

1. Coarse aggregate sample
2. Weighing balance
3. Container with full of water

Procedure

1. Clean the test sample and weigh it as 'W_1'gm.
2. It is immersed in clean water for about 72 hours.
3. Then it is removed and wiped out if any traces of water with a damp cloth.
4. It is the weighed in a weighing balance. Let it be 'W_2' gm.

The percentage of water absorption is calculated using the formula $\frac{W_2 - W_1}{W_1} \times 100$

TABULATION

Sl.No.	Dry weight of specimen W_1	Weight of saturated specimen W_2	Percentage of water absorption $\frac{W_2 - W_1}{W_1} \times 100$
Sample 1			
Sample 2			
Sample 3			

Note

Aggregates which absorbs not more than 0.6 percentage of water is suitable for road works.

Result

The percentage of water absorption for the given sample of coarse aggregate is ___________%

08. WATER ABSORPTION TEST ON BRICK.

Aim

To find out the percentage of water absorption for the given brick.

General Information

This test is conducted to determine the quality of Bricks.

Materials and Apparatus required

1. Bricks
2. Balance with weight
3. Tub with water

Procedure

1. The given brick is cleaned and weighed by using the weighing balance. Let it be W_1 gms.
2. It is then immersed in water in the tub for nearly 16 hours.
3. Now the brick is taken out from the tub and all the water on the surface of the brick is wiped off.
4. Now the wet brick is weighed by using the weighing balance. Let it be W_2 gms.

The percentage of water absorption by the brick is calculated by using the formula

$$\frac{W_2 - W_1}{W_1} \times 100$$

Sl.No.	Dry weight of specimen W_1	Weight of saturated specimen W_2	Percentage of water absorption $\frac{W_2 - W_1}{W_1} \times 100$
Sample 1			
Sample 2			
Sample 3			

Notes

The I class bricks may absorb water less than 20 percentage and the II class bricks may absorb water upto 22 percentage by weight.

Result

The percentage of water absorption for the given brick sample is __________%

09. SETTING OUT WORK FOR A SINGLE ROOM BUILDING FOR FOUNDATION.

SETTING OUT BUILDINGS

Aim

To set out at the site, the intended lines of the foundation of a building.

Materials required

1. Measuring tape
2. Trisquare
3. Bundle of string
4. Hammer
5. Pegs
6. Lime Powder

Procedure

1. All the vegetations in the construction site are removed and levelled.
2. Study thoroughly the plan of the building. For example, take the inner measurements as 4.80 x 3.30 m
3. Prepare a centre line sketch.
4. The wall thickness of the building is 0.20m, so the centre to centre distance of the room is 5.00 x 3.50 m
5. Mark a straight line 'AB' (i.e. 5.00 m) and extend the both ends of the line and name it as 1 and 2. Tie a string tightly in it.
6. Set out a perpendicular line from 'B'. Mark the length of 'BC' (i.e. 3.50m). Extend the ends and name it as 3 and 4. Tie a string in it also.
7. Set out a perpendicular line 'CD' from 'C' (i.e. 5.00 m) and tie a string in the extended ends 5 and 6.
8. Like wise mark 'DA' and tie a string in it. Now check the diagonal of the string bounded rectangle 'ABCD.'
9. Mark the half of the width of the foundation on either side of the centre line and indicate it with Lime powder. Thus foundation trench is marked.

Checking

The diagonals 'AC' and 'BD' should be checked for the correctness. (AC = BD).

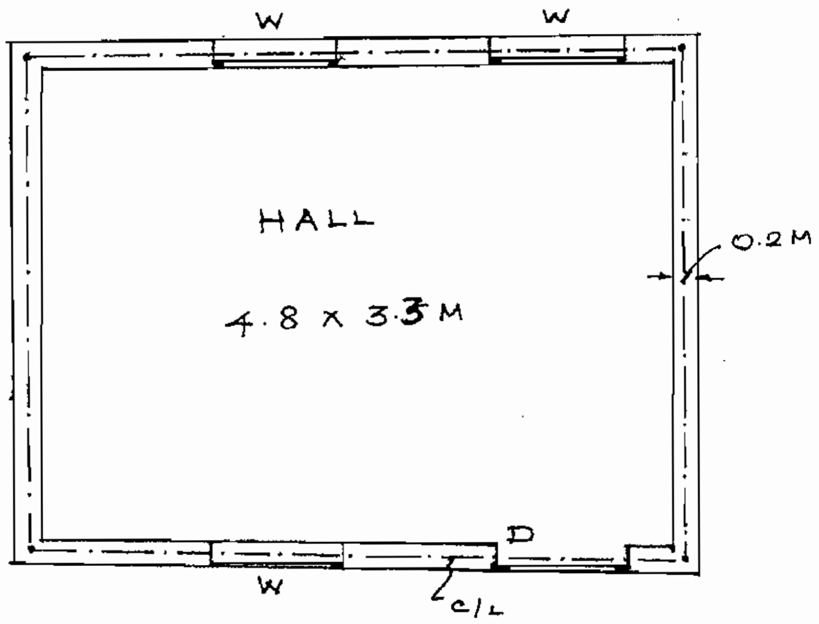

PLAN

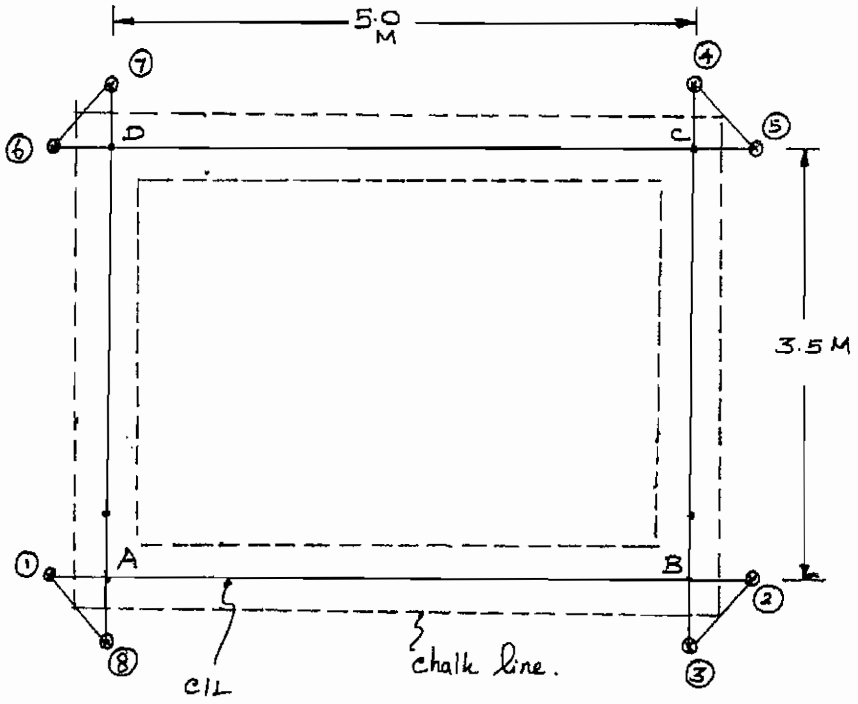

10. CONSTRUCT A BRICK MASONRY IN ENGLISH BOND FOR A ONE BRICK WALL.

ARRANGEMENT OF BRICKS BY ENGLISH BOND

Aim

To know the arrangement of bricks for 200mm walls at right angled conner in English bond.

Tools required

1. Bricks
2. Mortar
3. Trowel
4. Straight edge
5. Plumb bob
6. Spirit level
7. Trisquare

Procedure

Featues of English Bond

i. It consists of headers and stretchers in alternate course.

ii. A queen closer is placed next to the quoin header in each header course to the full thickness of the wall to create bond.

iii. Each alternate header lies centrally over a stretcher of the stretcher course.

iv. If the wall thickness is in multiples of an even number of half bricks the same coarse will show either headers (or) stretchers on both the face and back.

v. If the wall thickness is in multiples of an uneven number of half bricks, the same course will show headers on the face and stretchers on the back (or) stretcher on the face and headers on the back.

vi. Continuous vertical joints are avoided. For walls having thickness of two bricks (or) more the interior should be filled with headers only.

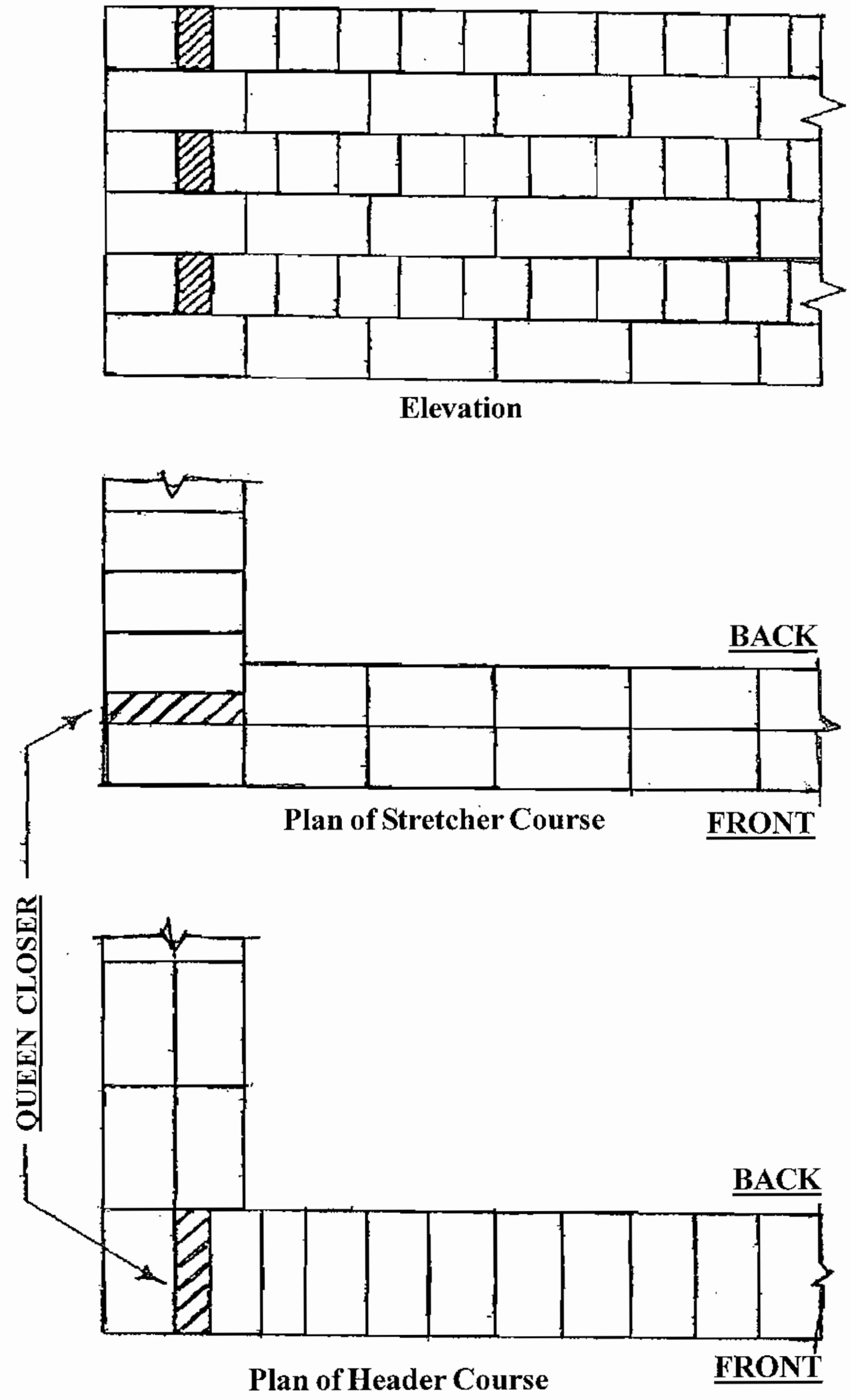

One Brick Wall - 20 cm

ARRANGEMENT OF BRICKS BY ENGLISH BOND

11.CONSTRUCT A BRICK MASONRY IN FLEMISH BOND FOR A ONE BRICK WALL

ARRANGEMENT OF BRICKS BY FLEMISH BOND

Aim

To know the arrangement of brick for 200mm thick wall at right angled corner in Flemish bond.

Tools required

1. Bricks
2. Mortar
3. Trowel
4. Straight edge
5. Plumb bob
6. Spirit level
7. Trisquare

Procedure

Features Flemish bond

i. It consists of headers and stretchers placed alternately in every course.

ii. A queen closer is placed next to the quoin header in alternate course to create bond.

iii. A header in any course is at the centre of a stretcher in the course below it.

iv. If the wall thickness is in multiples of an uneven number of half bricks, more brick bats are to be used.

v. A large number of 5 cm lap joints occurs in this bond.

vi. This bond has lesser strength when compared with English Bond.

There may be a chance for occurring vertical joints.

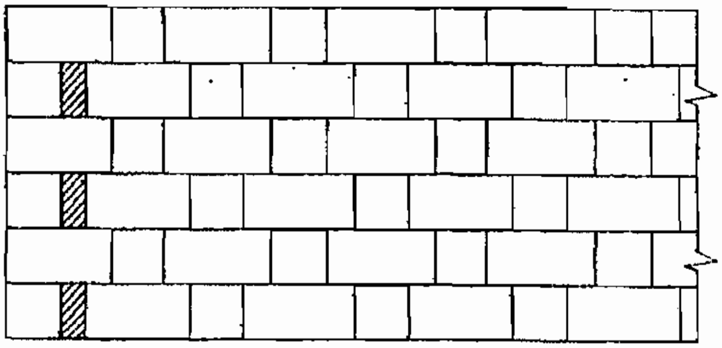

Front Elevation

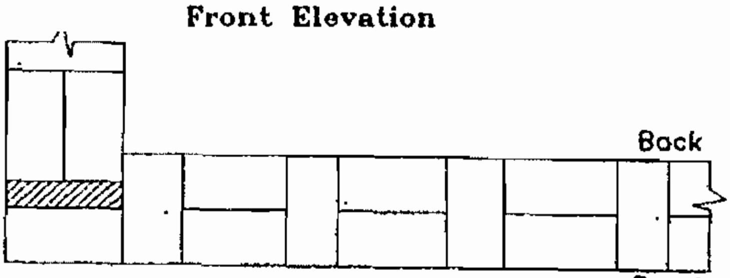

Even Course

Odd Course

One Brick Wall in Flemish bond

ARRANGEMENT OF BRICKS BY FLEMISH BOND

12. WHITE AND COLOUR WASHING FOR A PLASTERED SURFACE

WHITE AND COLOUR WASHING

Aim

To paint the plastered surface and know the technique involved in it.

Definition

1. It gives a clean and beautiful surface.
2. It is also used as a disinfectant
3. It gives brightness to the interior surface of the room

Procedure

a). Preparation of white wash

Slaked lime is dissolved with water and strained through a clean coarse cloth.

2 Kg/m^3 of gum dissolved in hot water is then added to it.

Small amount of Blue is added to it to get brightness.

b) Preparation of surface

The surface should be cleaned

In case of rewhite washing all loose materials and scales should be scrapped off.

The surface should be kept wet.

All the holes are to be filled with putty.

All the greasy spots and smoke should be cleaned well.

c) Method of white washing

Usually two or three coats are applied for new work.

The second coat is applied after the first coat is dried.

The unpainted surfaces are covered by this.

One stroke is given from top downwards and other from to right to left.

d) Method of colour washing

The surface is cleaned and got wet.

The first coat is applied with white cement using good brushes.

The second coat is applied with coloured cement dissolved in water in opposite direction of the first coat.

The third coat is applied after these coats are dried.

Water should be sprinkled on the surface for three days to cure the surface.

13. STUDY OF STEEL FABRICATION FOR A LINTEL

LINTEL CUM SUNSHADE

Aim

To know the technique involved in the arrangement of reinforcement for lintel cum sunshade.

Definition

Lintels

Lintels are construct over the door, window and ventilator openings to distribute the loads to wall below it. It is also used to support the sunshade. The top rods of the beam are known as Hanger bars, and the bottom rods are known as main rods. The bottom reinforcements are used to balance the tensile stresses formed in it. Stirrups are used to support the shear force.

Sunshade

The rods which are produced from the lintel are called as main rods and the perpendicular rods to the main rods are called as distributors. The thickness of the sunshade must be more than the suspended end to balance the bending moment produced there. The slope of the sunshade is used for easy drain of rain water.

Materials required

1. Hammer
2. Chisel
3. Bar bending tool
4. Main rods
5. Distributor rods
6. Stirrups
7. Binding wire

Procedure

1. Read carefully the reinforcement details given by the Engineer.
2. Prepare the stirrups with proper height and breadth in required numbers.
3. Cut the main rods, distributors and hanger bars to required length.
4. Tie the rods with the stirrups as shown in the diagram using binding wire.
5. Thus the reinforcement is arranged for a lintel cum sunshade.

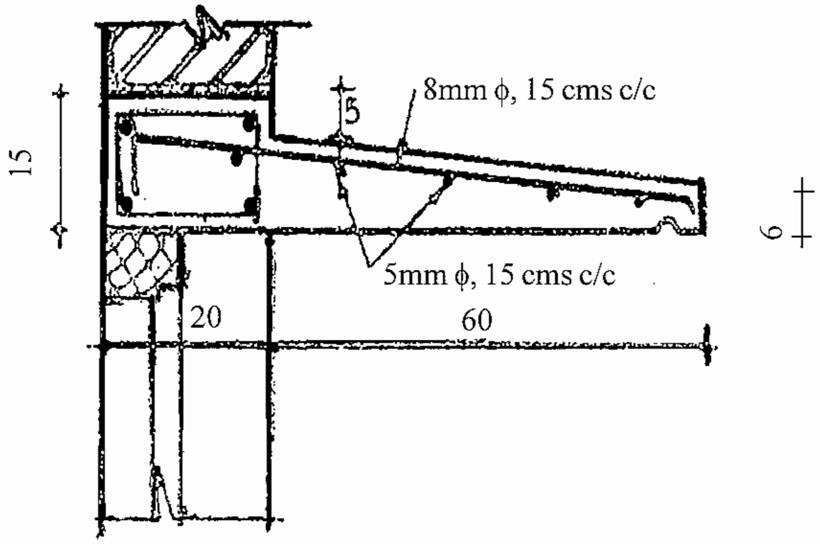

LINTEL WITH SUNSHADE

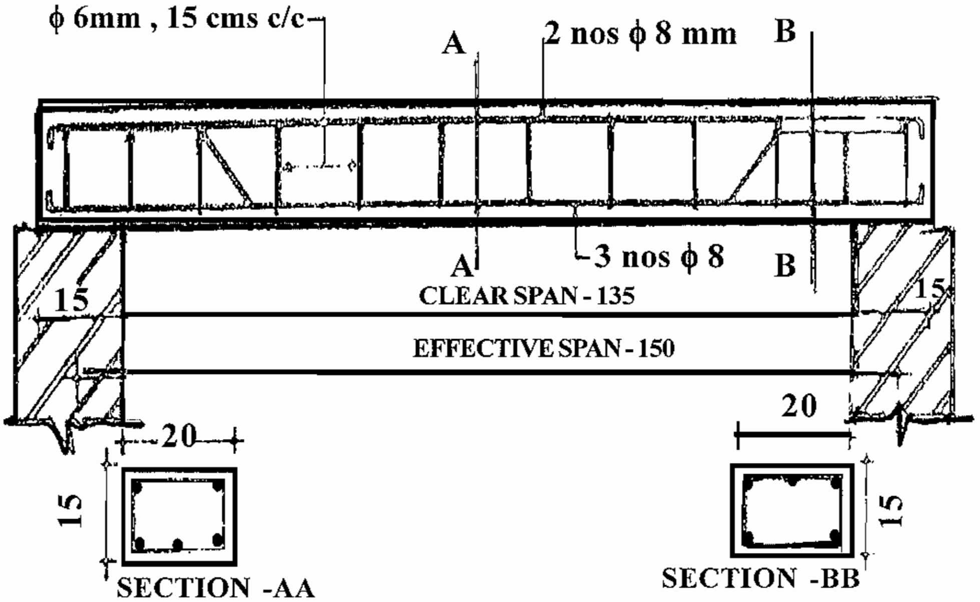

LINTEL

14. STUDY OF STEEL FABRICATION FOR A ONE WAY SLAB.

ONEWAY SLAB

Aim

To know the technique involved in the arrangement of reinforcement.

Definition

Oneway slabs are designed in the places where the ratio of length and breadth is equal to or more than two.

The main rods are placed at the shorter span to balance the bending moment and the distributors are placed at the longer span perpendicular to the main rods. Normally 10mm (or) 12 mm dia rods are used as main rods and 6 mm (or) 8 mm dia rods are used as distributors. The spacings should be adjusted according to the amount of bending moment produced in the slab.

Materials required

1. Hammer
2. Chisel
3. Bar bending tool
4. Main rods
5. Distributor rods
6. Stirrups
7. Binding wire

Procedure

1. Read carefully the reinforcement details given by the engineer.
2. Cut the main rods and distributors to the required length.
3. Crank the main rods at the required distance and height.
4. Place the mainrods and distributors at the determined spacings and tie it tightly using binding wire.
5. Check the spacings.
6. Thus the reinforcement is arranged for a one way slab.

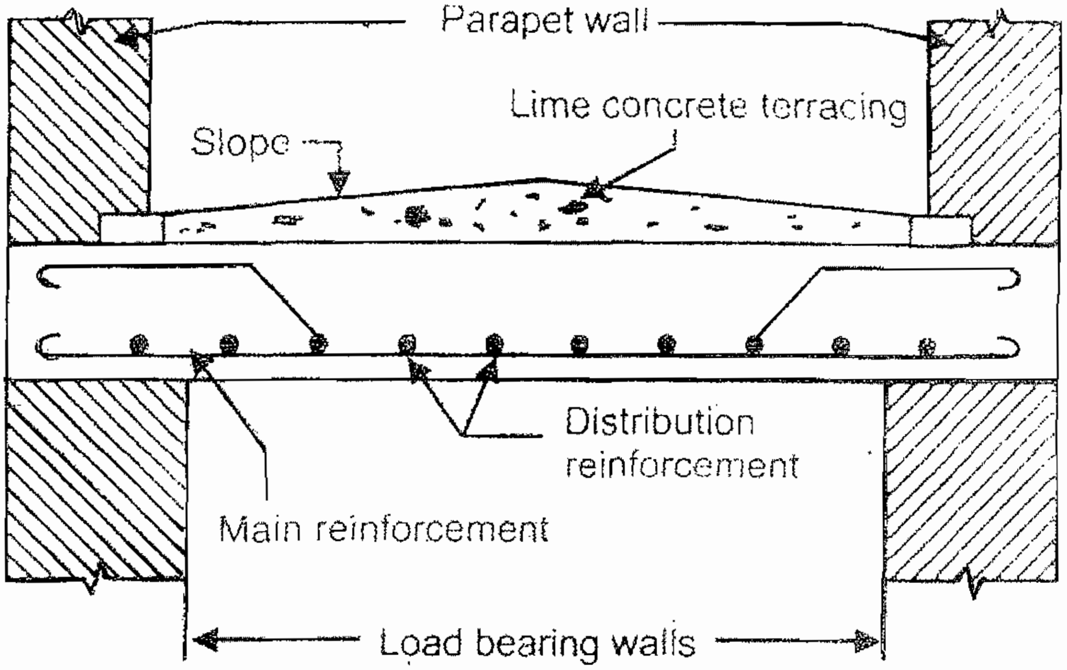
Parapet wall
Lime concrete terracing
Slope
Distribution
reinforcement
Main reinforcement
Load bearing walls

ONE WAY SLAB